Kona SVT-NCS Schematic Block Diagram

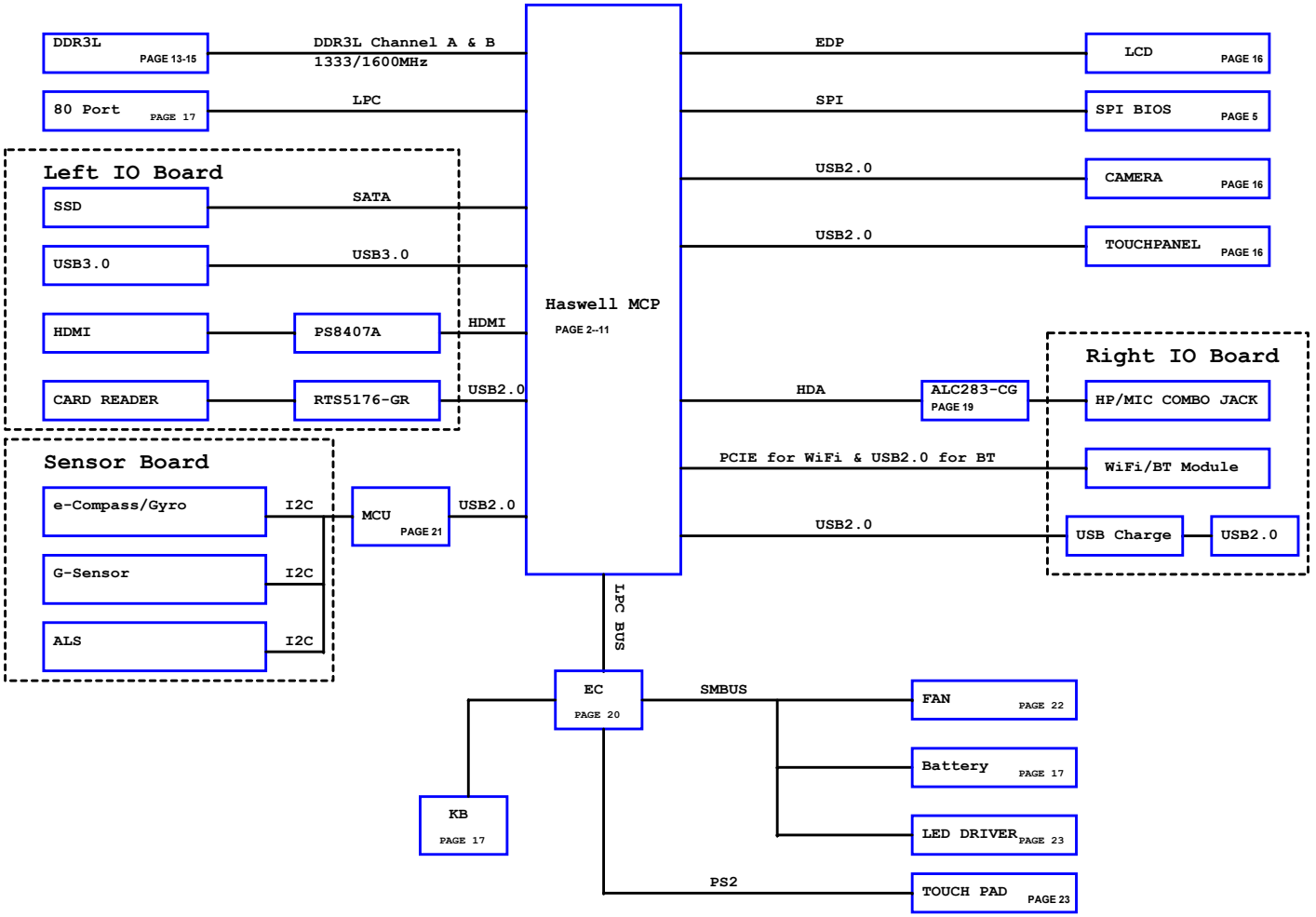

3V/5V
PAGE 27

1.05V
PAGE 25

0.68V/1.35V
PAGE 28

1.5V
PAGE 26

SWITCH POWER
PAGE 30

WALKPORT
PAGE 31

CPU_CORE
PAGE 32

CHARGER
PAGE 29

lenovo联想 LENOVO.CRDN

Title: Block Diagram

Size: C | Document Number: Kona | Rev V1.0

Date: Tuesday, August 06, 2013 | Sheet 1 of 34

"PROPERTY NOTE: this document contains information confidential and property to LENOVO PND and shall not be reproduced or transferred to other documents or disclosed to others or used for any purpose other than that for which it was obtained without the expressed written consent of LENOVO PND."

Haswell MCP (DDI,EDP)

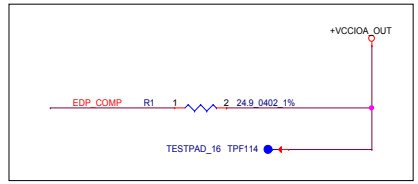

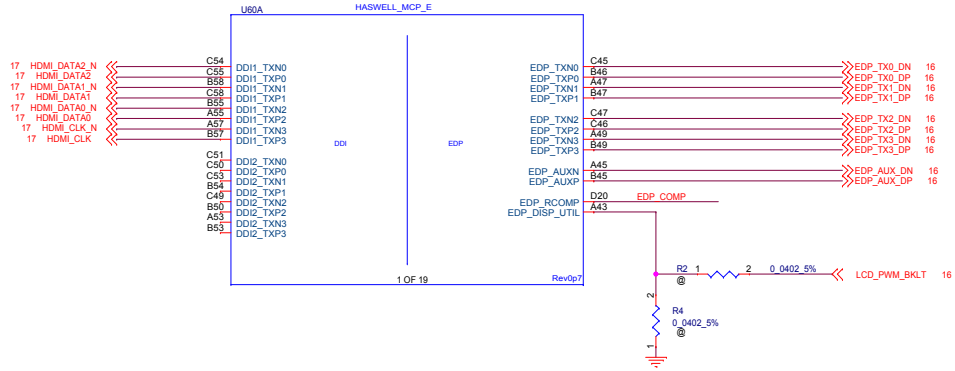

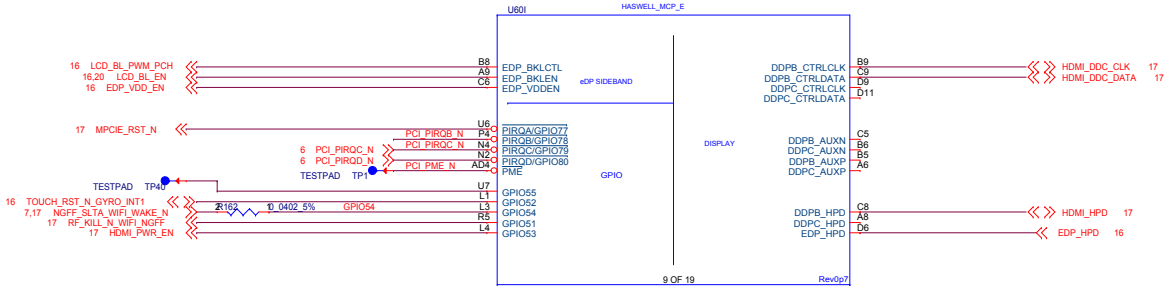

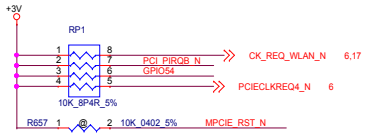

lenovo联想	LENOVO.CRDN	
Title	Haswell MCP (DDI,EDP)	
Size C	Document Number Kona	Rev V1.0
Date: Tuesday, August 06, 2013	Sheet 2 of 34	

"PROPERTY NOTE: this document contains information confidential and property to LENOVO PND and shall not be reproduced or transferred to other documents or disclosed to others or used for any purpose other than that for which it was obtained without the expressed written consent of LENOVO PND."

Haswell MCP (MISC,THERMAL,JATG)

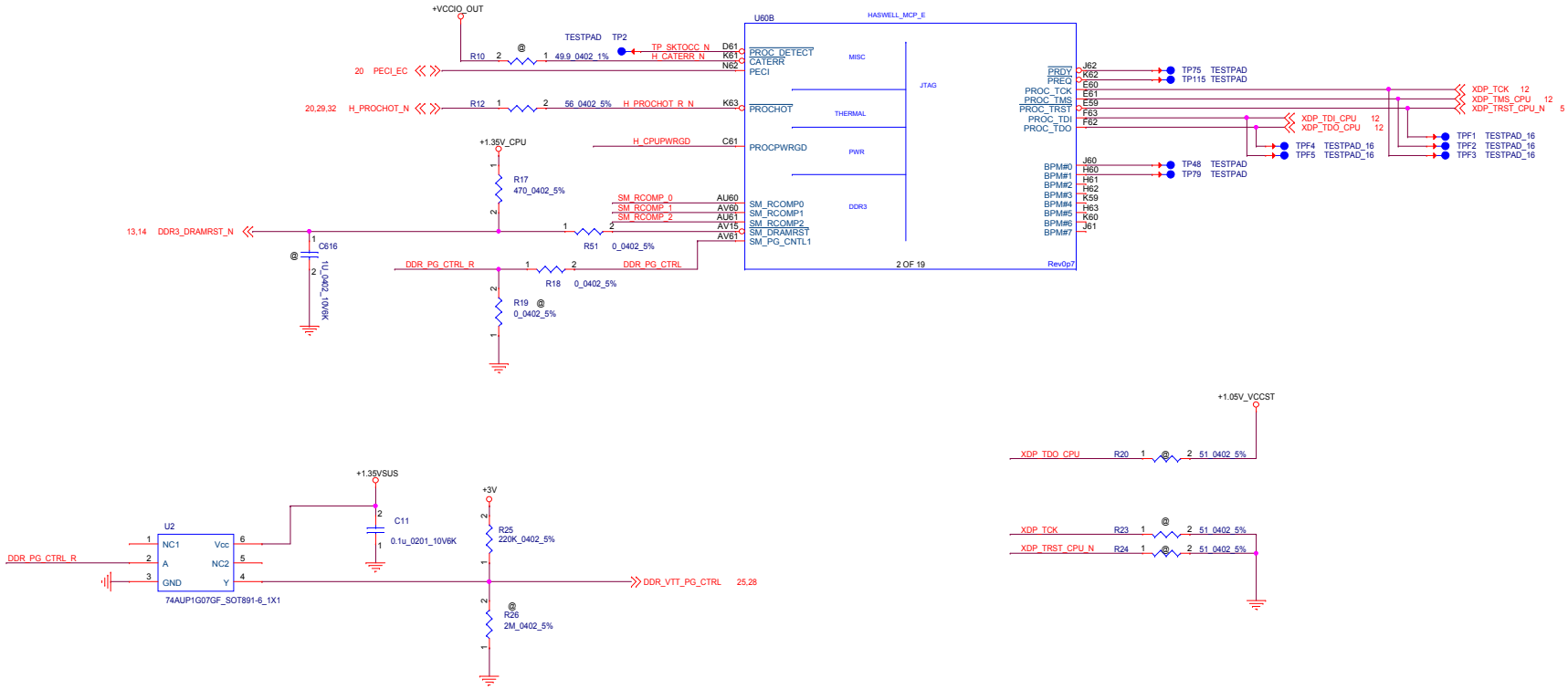

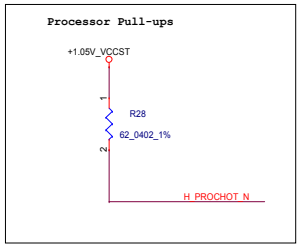

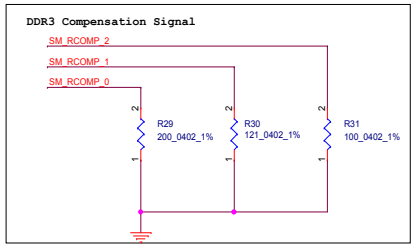

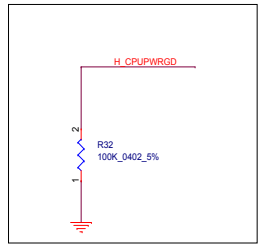

lenovo联想	LENOVO.CRDN	
Title	Haswell MCP (MISC,THERMAL,JATG)	
Size C	Document Number Kona	Rev V1.0
Date: Tuesday, August 06, 2013	Sheet 3 of 34	

"PROPERTY NOTE: this document contains information confidential and property to LENOVO PND and shall not be reproduced or transferred to other documents or disclosed to others or used for any purpose other than that for which it was obtained without the expressed written consent of LENOVO PND."

Haswell MCP(LPDDR3)

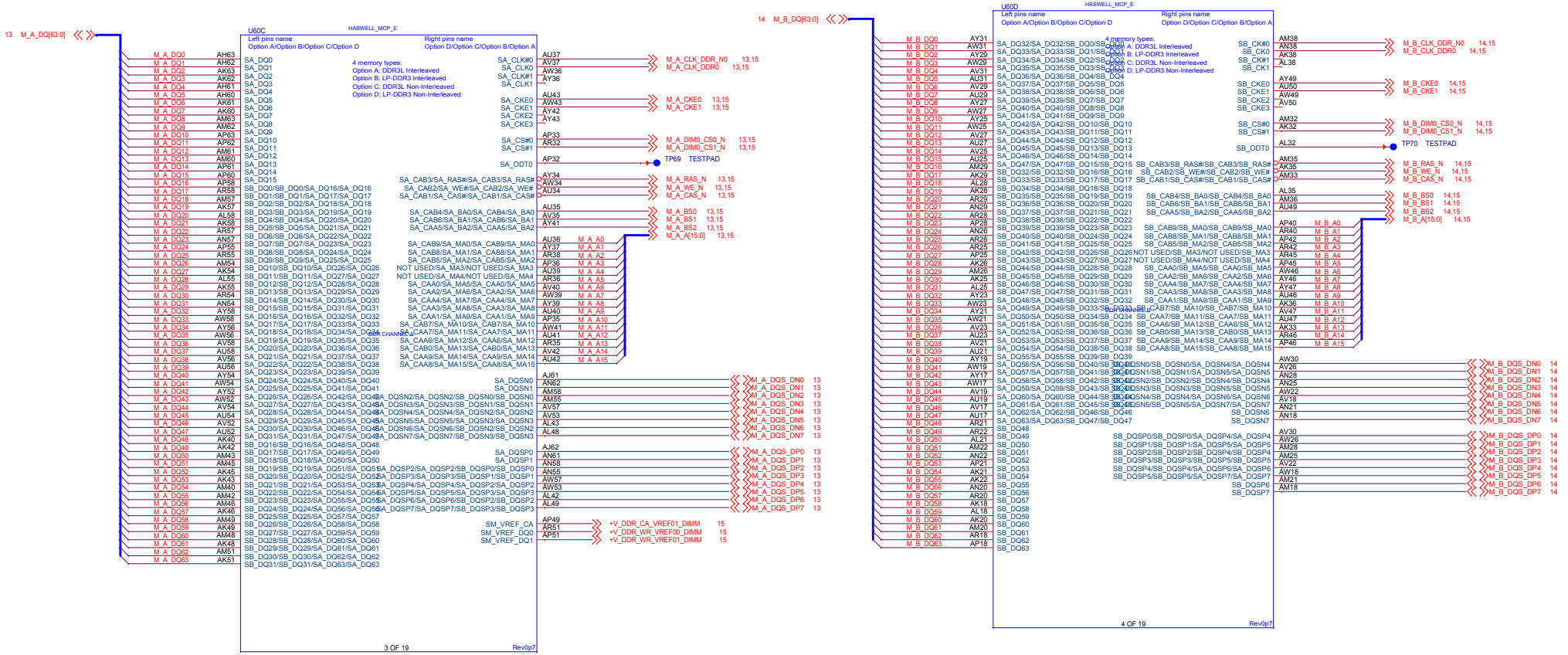

lenovo联想 LENOVO.CRDN

Title: Haswell MCP(LPDDR3)

Size: C | Document Number: Kona | Rev: V1.0

Date: Tuesday, August 06, 2013 | Sheet 4 of 34

"PROPERTY NOTE: this document contains information confidential and property to LENOVO PND and shall not be reproduced or transferred to other documents or disclosed to others or used for any purpose other than that for which it was obtained without the expressed written consent of LENOVO PND."

Haswell MCP (RTC,AUDIO,JTAG,SATA,LPC,SPI,SMBUS)

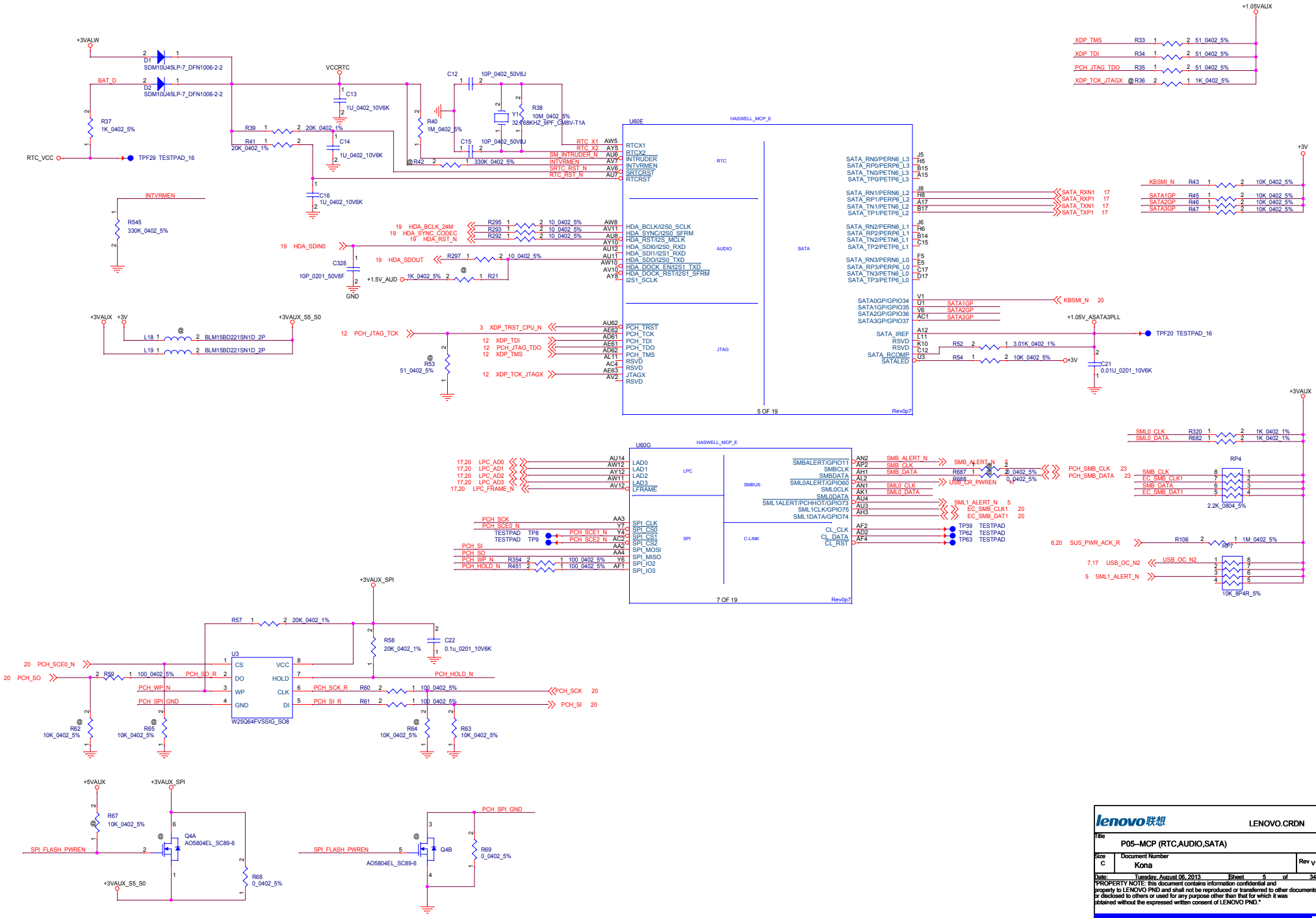

lenovo联想	LENOVO.CRDN		
Title	P05--MCP (RTC,AUDIO,SATA)		
Size C	Document Number Kona		Rev V1.0
Date: Tuesday, August 06, 2013	Sheet 5 of 34		

"PROPERTY NOTE: this document contains information confidential and property to LENOVO PND and shall not be reproduced or transferred to other documents or disclosed to others or used for any purpose other than that for which it was obtained without the expressed written consent of LENOVO PND."

Haswell MCP (Clock,PM)

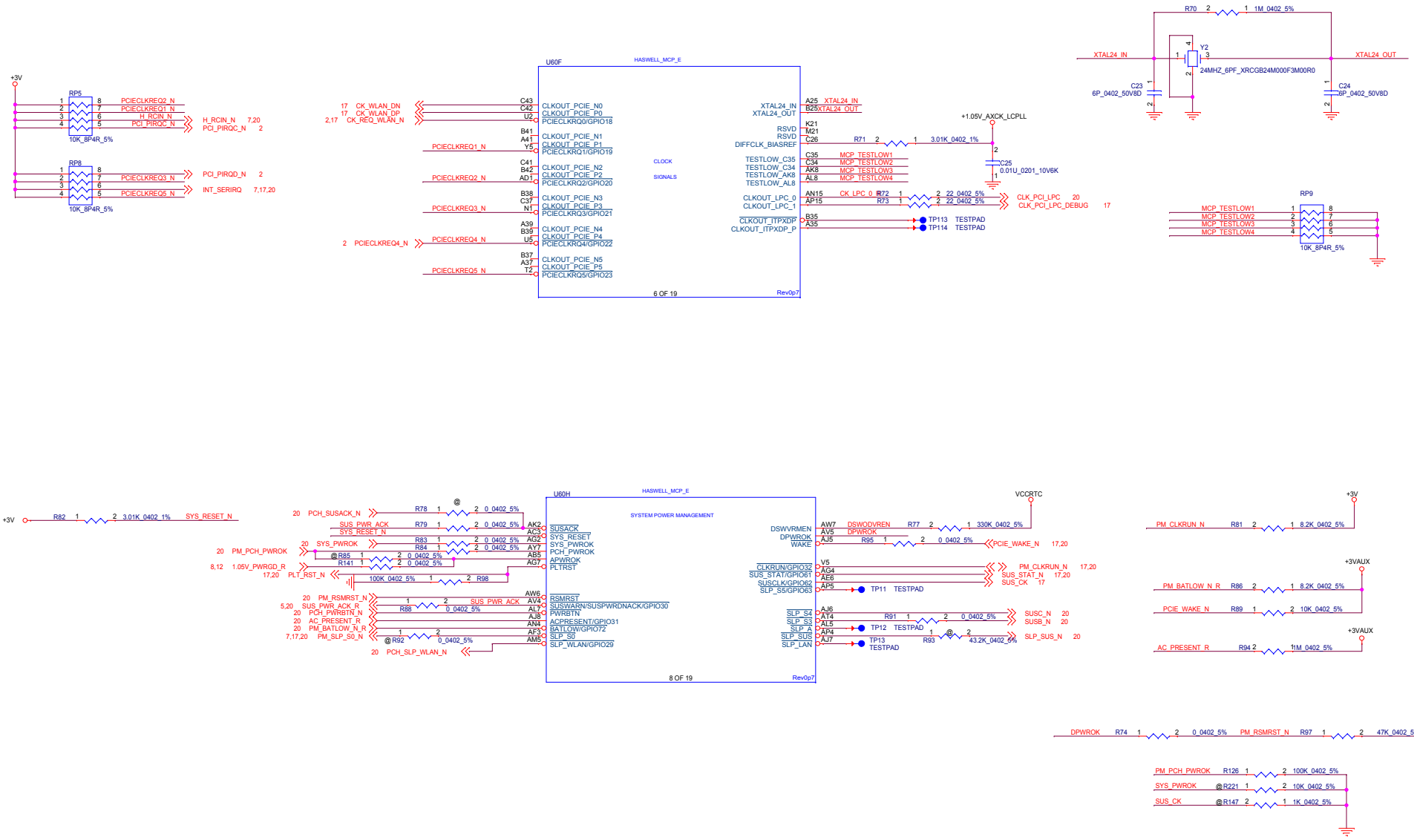

lenovo联想	LENOVO.CRDN
Title	Haswell MCP (Clock,PM)
Size C	Document Number Kona
Rev V1.0	
Date: Tuesday, August 06, 2013	Sheet 6 of 34

"PROPERTY NOTE: this document contains information confidential and property to LENOVO PND and shall not be reproduced or transferred to other documents or disclosed to others or used for any purpose other than that for which it was obtained without the expressed written consent of LENOVO PND."

Haswell MCP (GPIO,USB,PCIE)

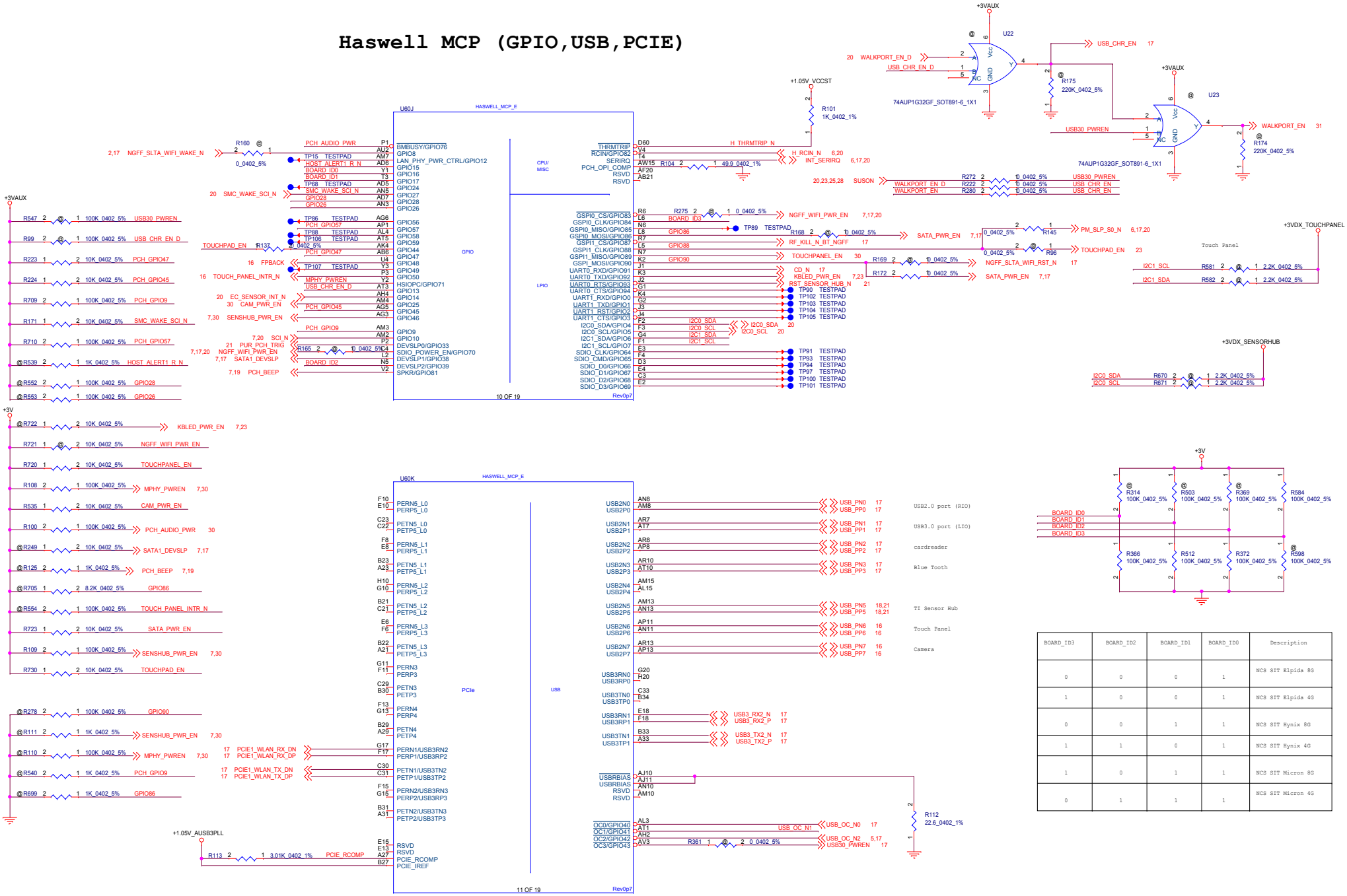

BOARD_ID3	BOARD_ID2	BOARD_ID1	BOARD_ID0	Description
0	0	0	1	NCS SIT Elpida 8G
1	0	0	1	NCS SIT Elpida 4G
0	0	1	1	NCS SIT Hynix 8G
1	1	0	1	NCS SIT Hynix 4G
1	0	1	1	NCS SIT Micron 8G
0	1	1	1	NCS SIT Micron 4G

lenovo联想 LENOVO.CRDN

Title: Haswell MCP (GPIO,USB,PCIE)

Size: C | Document Number: Kona | Rev: V1.0

Date: Saturday, August 10, 2013 | Sheet 7 of 34

"PROPERTY NOTE: this document contains information confidential and property to LENOVO PND and shall not be reproduced or transferred to other documents or disclosed to others or used for any purpose other than that for which it was obtained without the expressed written consent of LENOVO PND."

Haswell MCP (Power)

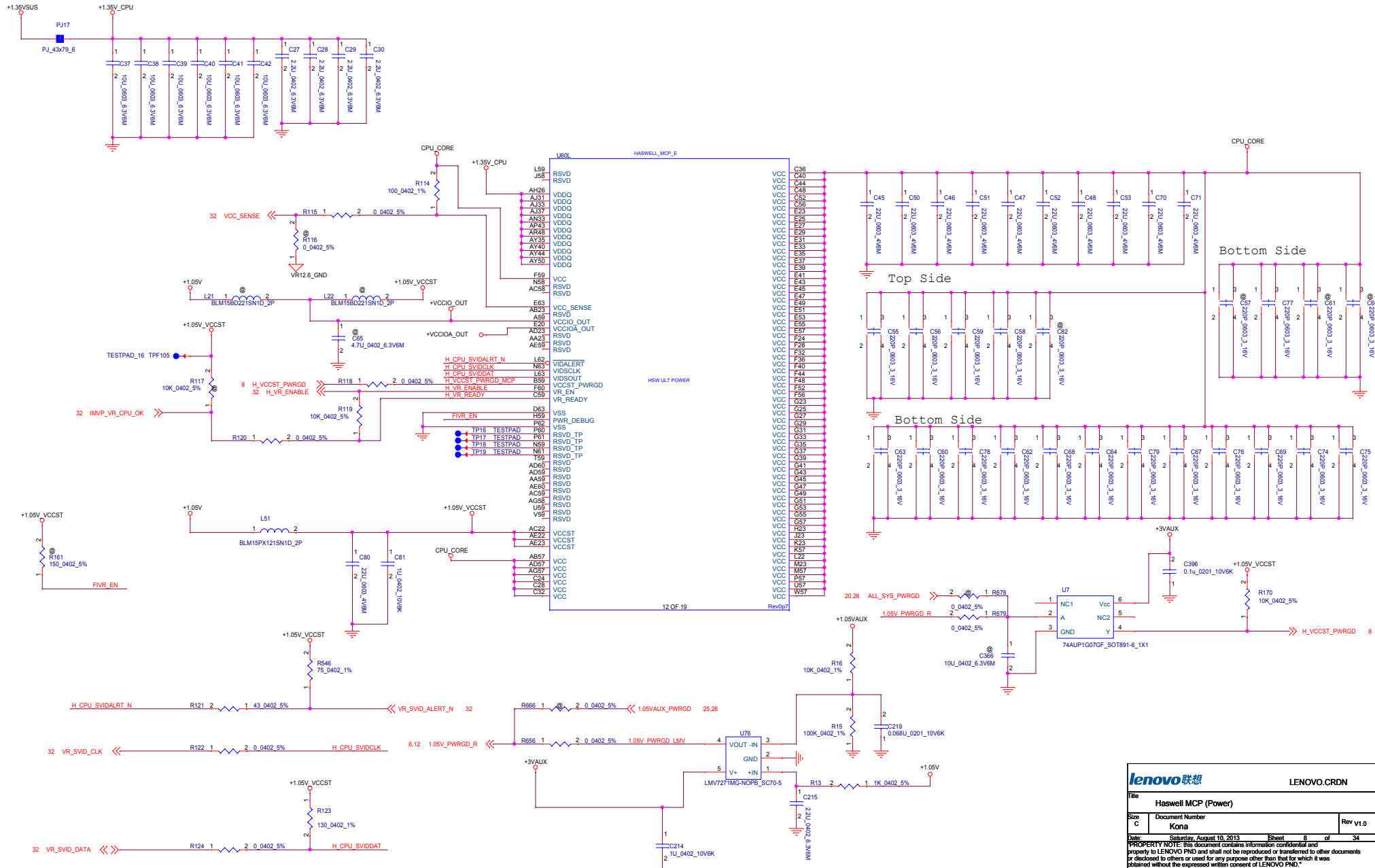

Haswell MCP (Power2)

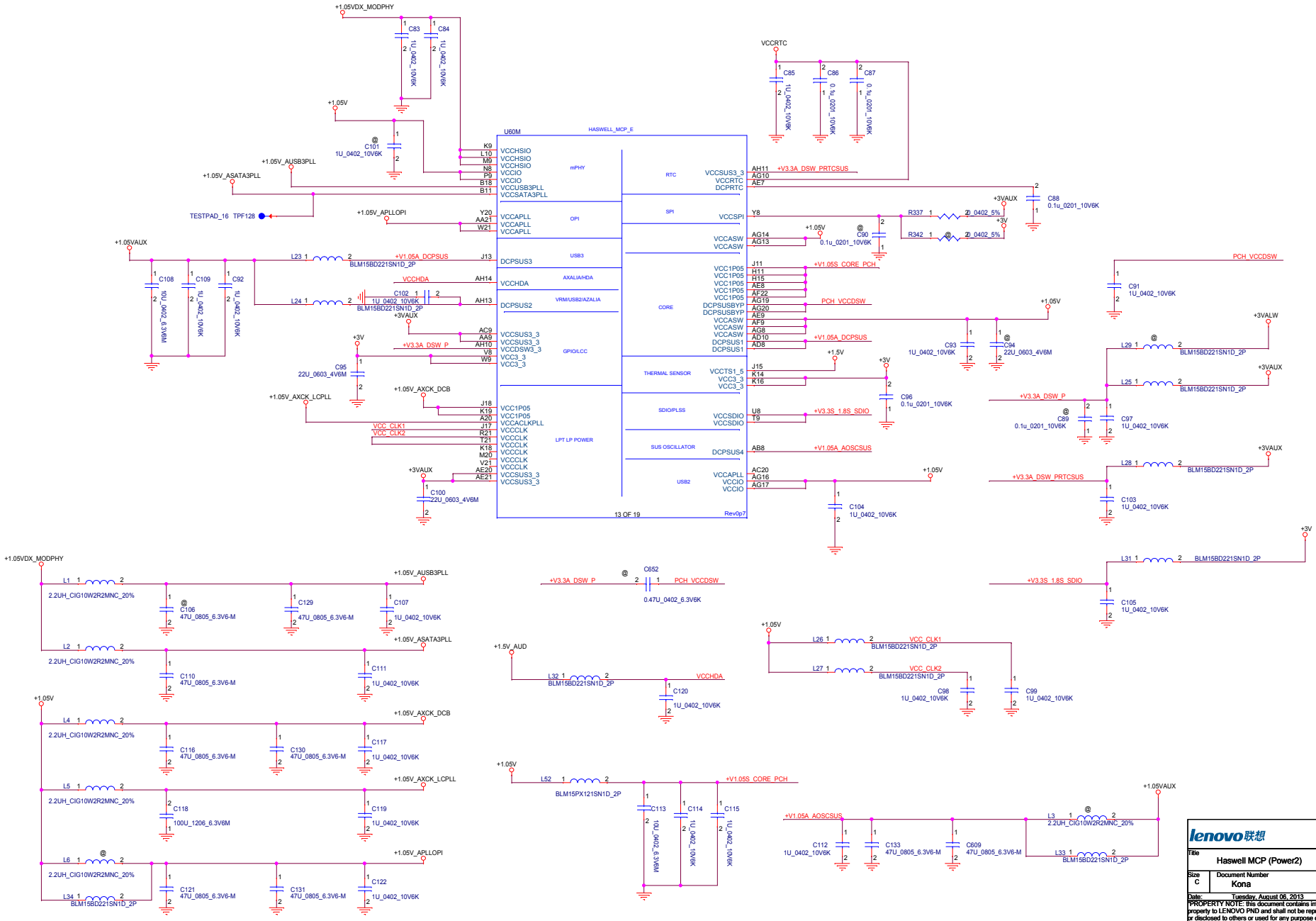

lenovo联想 LENOVO.CRDN

Title: Haswell MCP (Power2)

Size: C | Document Number: Kona | Rev V1.0

Date: Tuesday, August 06, 2013 | Sheet 9 of 34

"PROPERTY NOTE: this document contains information confidential and property to LENOVO PND and shall not be reproduced or transferred to other documents or disclosed to others or used for any purpose other than that for which it was obtained without the expressed written consent of LENOVO PND."

Haswell MCP (VSS)

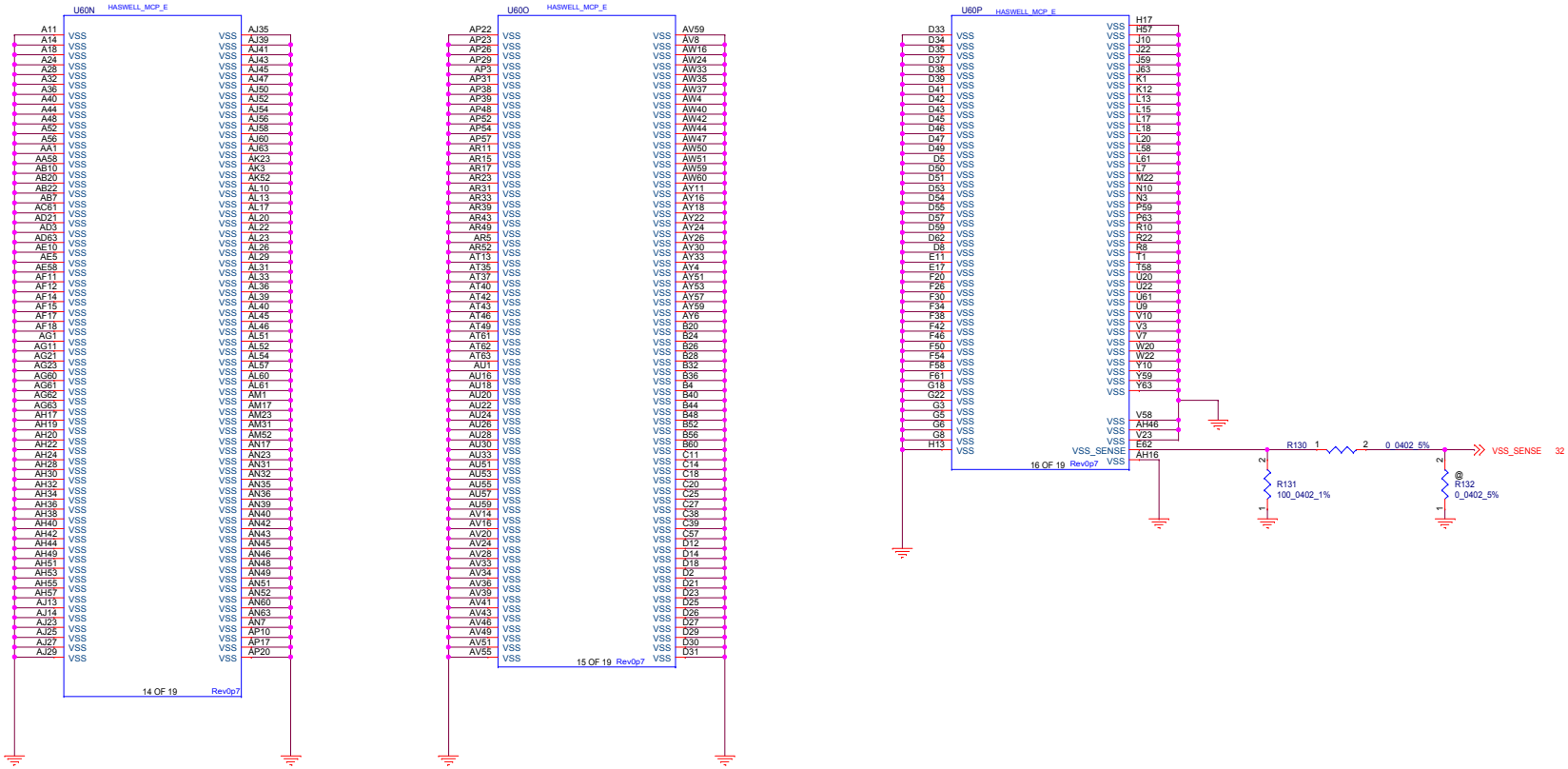

lenovo联想 LENOVO.CRDN

Title: Haswell MCP (VSS)

Size: C | Document Number: Kona | Rev: V1.0

Date: Tuesday, August 06, 2013 | Sheet 10 of 34

"PROPERTY NOTE: this document contains information confidential and property to LENOVO PND and shall not be reproduced or transferred to other documents or disclosed to others or used for any purpose other than that for which it was obtained without the expressed written consent of LENOVO PND."

Haswell MCP (OTHER)

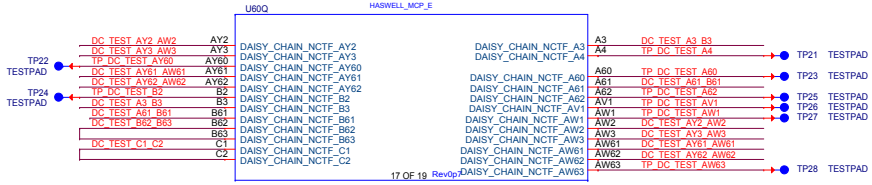

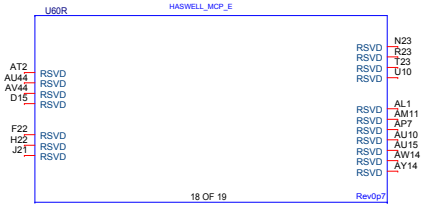

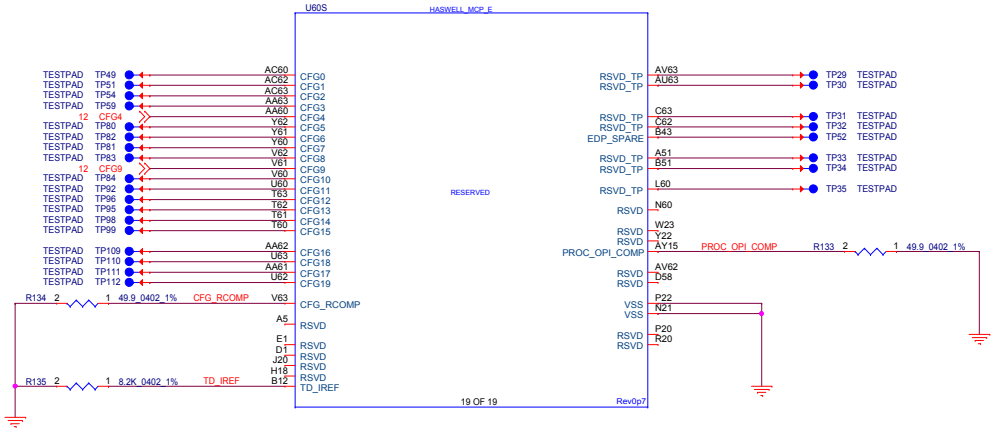

lenovo联想 LENOVO.CRDN

Title: Haswell MCP (OTHER)

Size: C | Document Number: Kona | Rev: V1.0

Date: Tuesday, August 06, 2013 | Sheet 11 of 34

"PROPERTY NOTE: this document contains information confidential and property to LENOVO PND and shall not be reproduced or transferred to other documents or disclosed to others or used for any purpose other than that for which it was obtained without the expressed written consent of LENOVO PND."

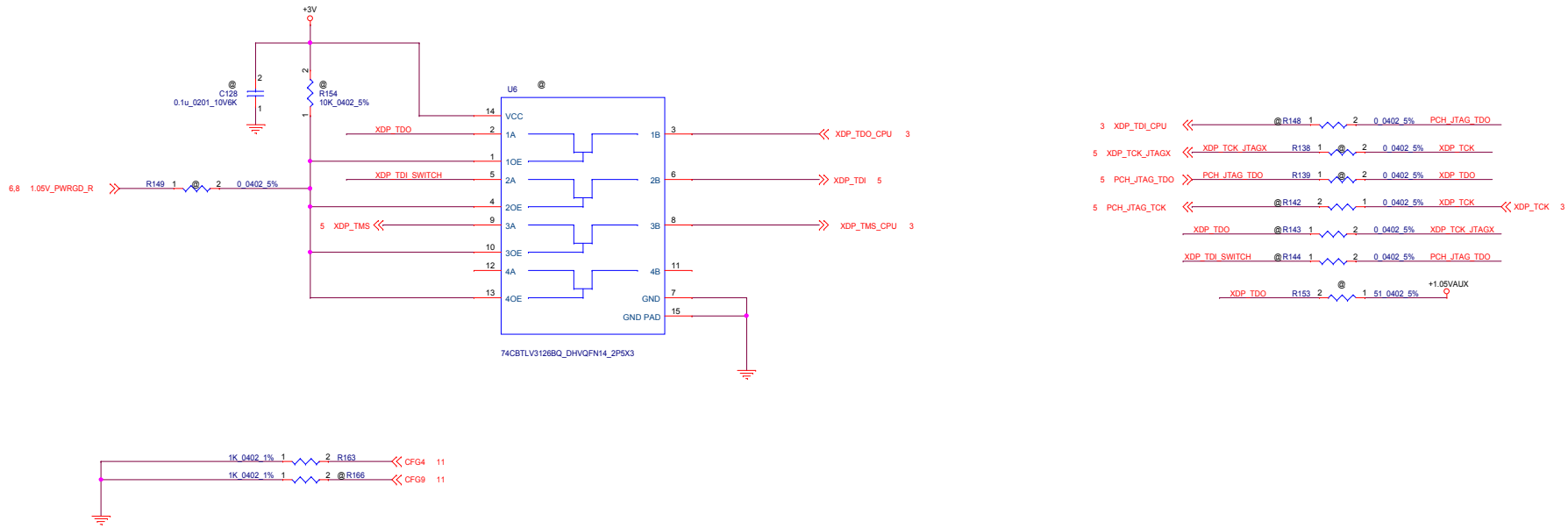

lenovo联想	LENOVO.CRDN	
Title	XDP CONN	
Size C	Document Number Kona	Rev V1.0
Date: Tuesday, August 06, 2013	Sheet 12 of 34	

"PROPERTY NOTE: this document contains information confidential and property to LENOVO PND and shall not be reproduced or transferred to other documents or disclosed to others or used for any purpose other than that for which it was obtained without the expressed written consent of LENOVO PND."

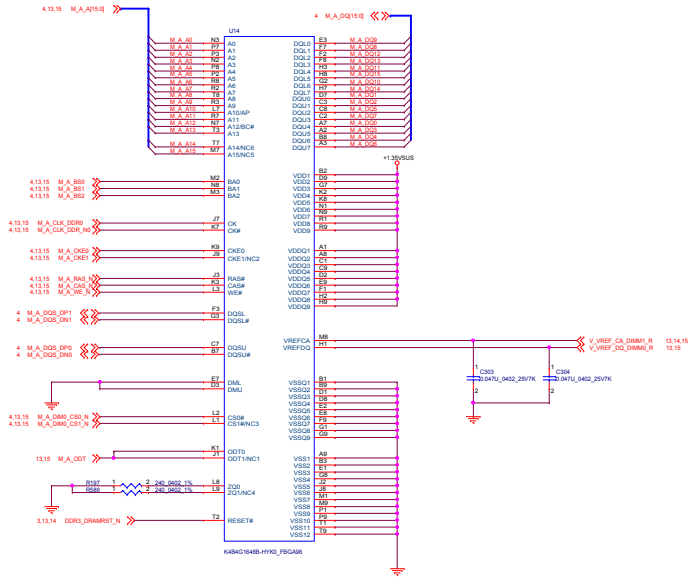

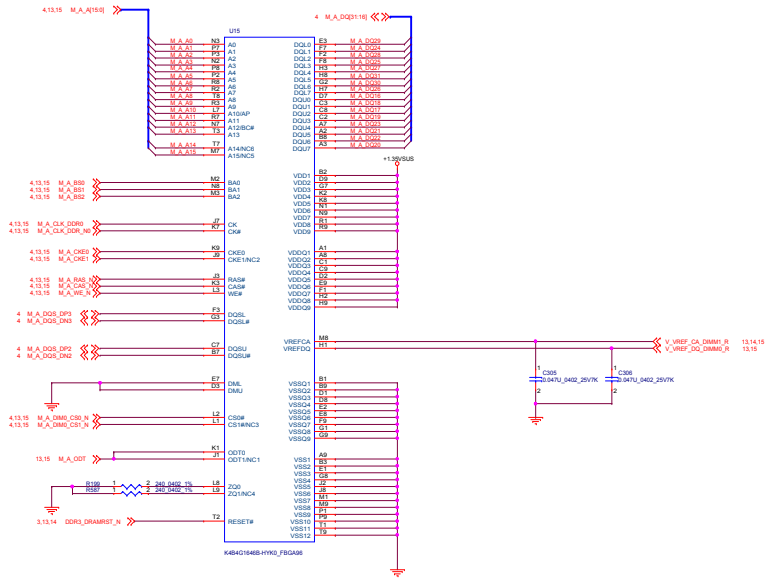

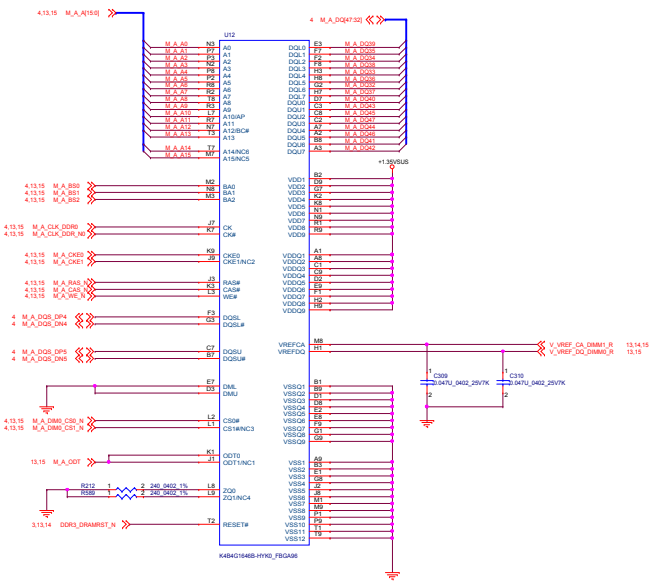

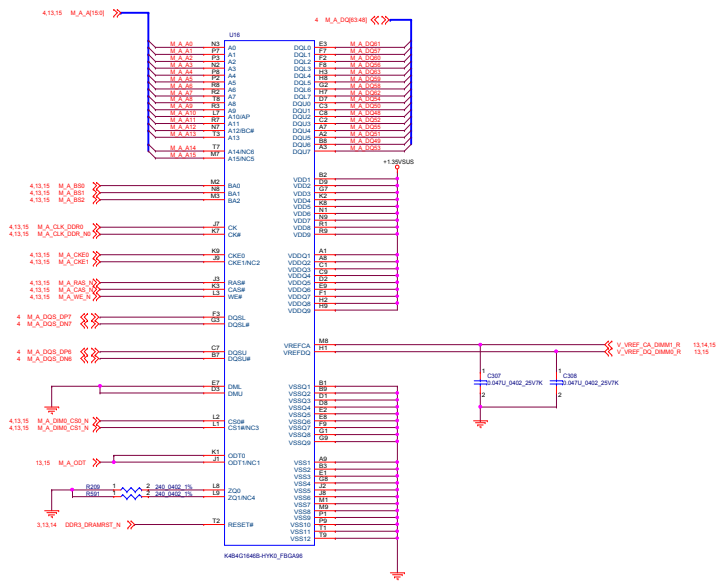

lenovo联想 LENOVO.CRDN

Title	LPDDR3-ONBD
Size D	Document Number Kona
	Rev V1.0
Date: Tuesday, August 06, 2013	Sheet 15 of 34

"PROPERTY NOTE: This document contains information confidential and proprietary to LENOVO PBD and shall not be reproduced or transferred to other documents or disclosed to others or used for any purpose other than that for which it was obtained without the expressed written consent of LENOVO PBD."

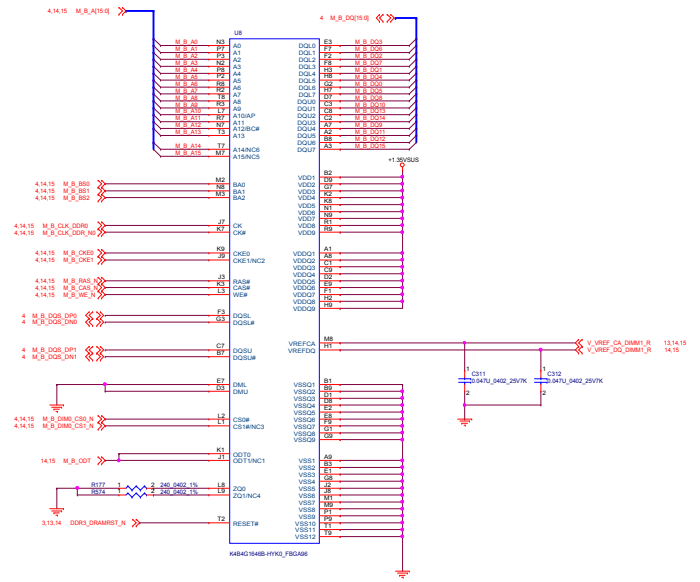

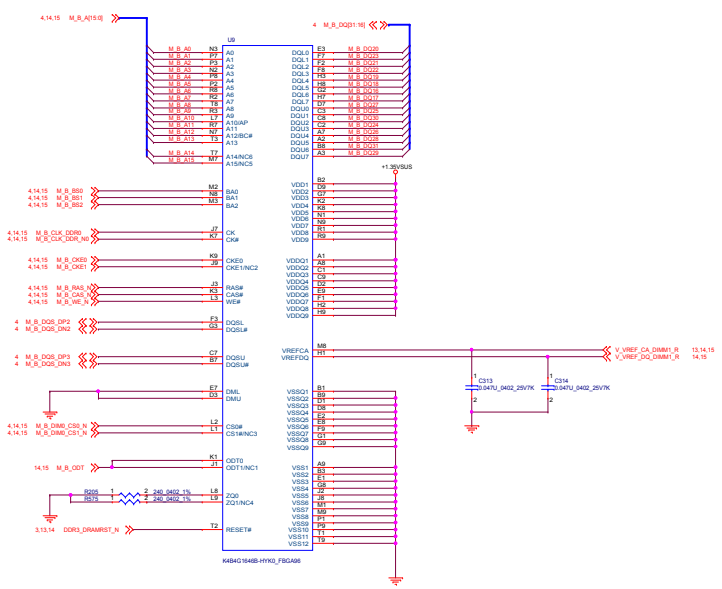

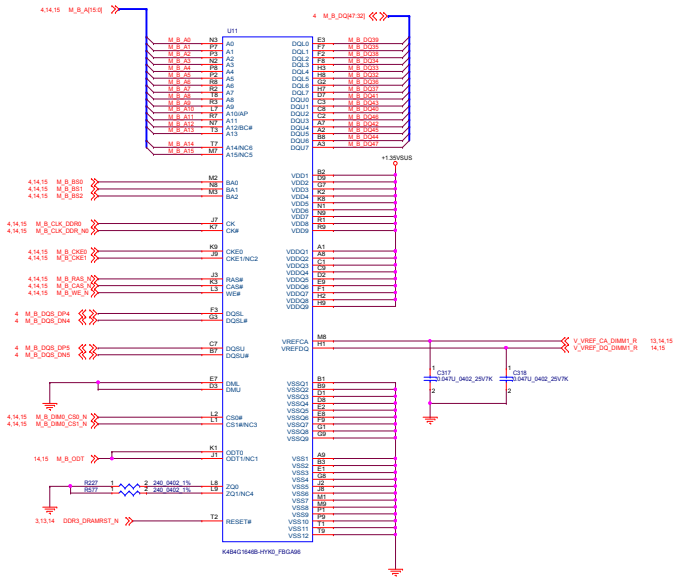

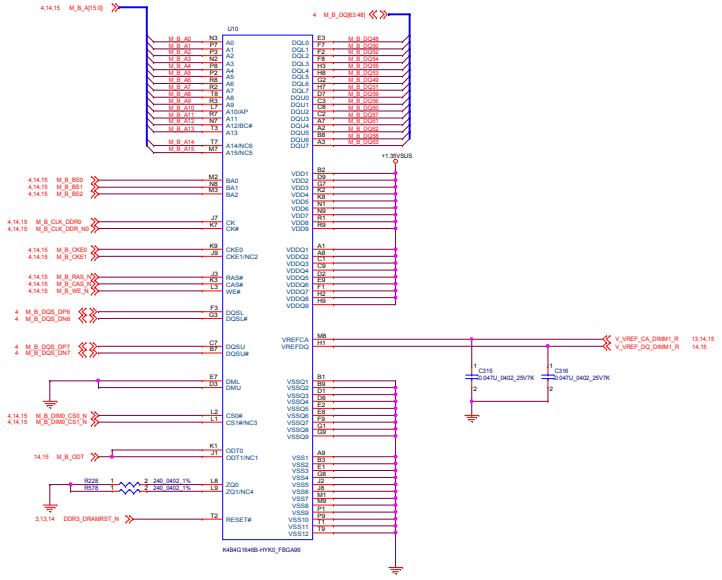

lenovo 联想

LENOVO.CRDN

Title: LPDDR3-ONBD

Size	Document Number	Rev
D	Kona	V1.0

Date: Tuesday, August 06, 2013 | Sheet 14 of 34

PROPERTY NOTE: this document contains information confidential and property to LENOVO PBD and shall not be reproduced or transferred to other documents or discloses to others or used for any purpose except that for which it was obtained without the expressed written consent of LENOVO PBD.

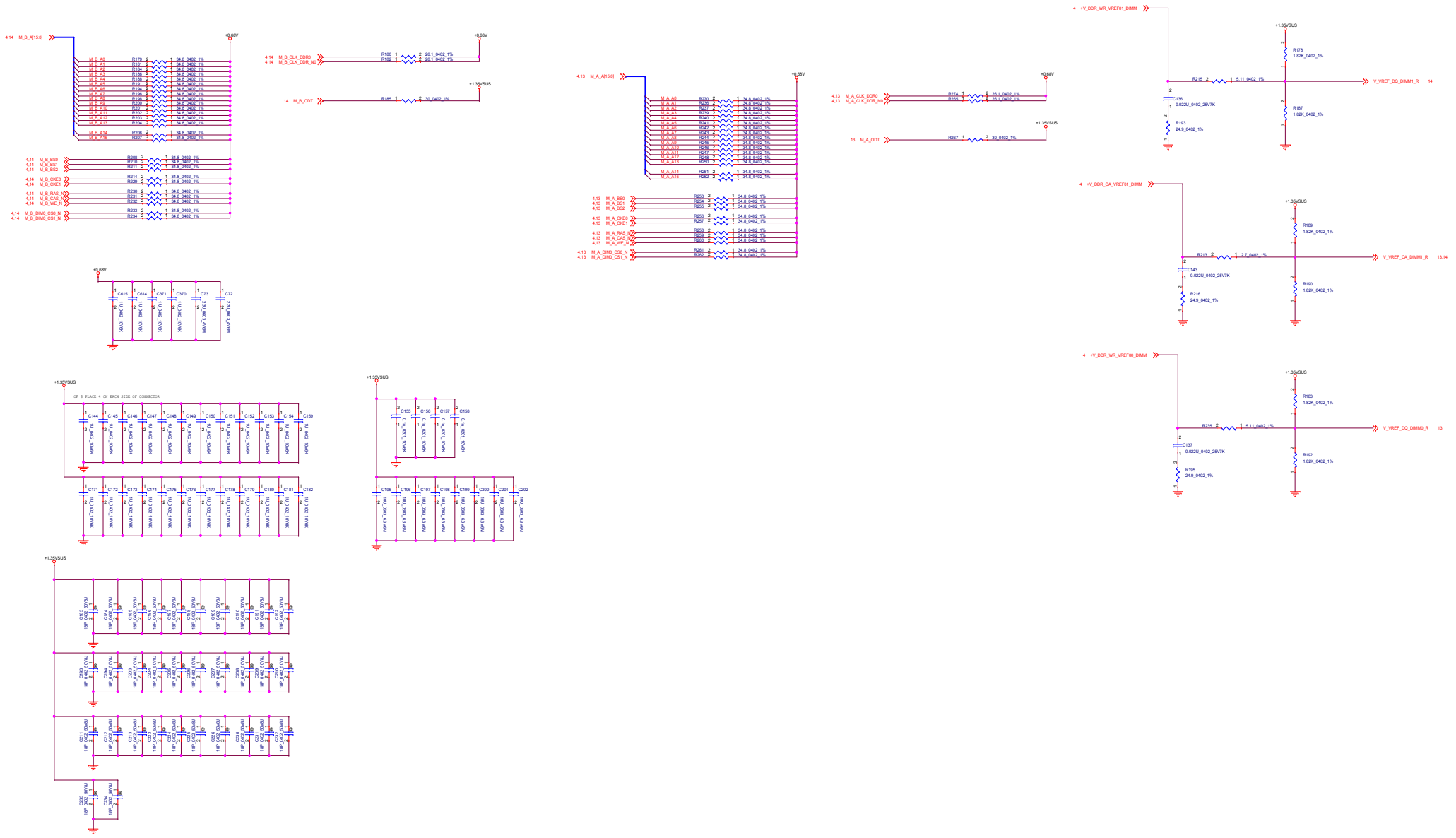

lenovo 联想 LENOVO.CRDN

Title: LPDDR3-TERMINATION

Size: D | Document Number: Kona | Rev: V1.0

Date: Tuesday, August 06, 2013 | Sheet 15 of 34

"PROPERTY NOTE: this document contains information confidential and property to LENOVO PBD and shall not be reproduced or transferred to other documents or disclosed to others or used for any purpose other than that for which it was obtained without the expressed written consent of LENOVO PBD."

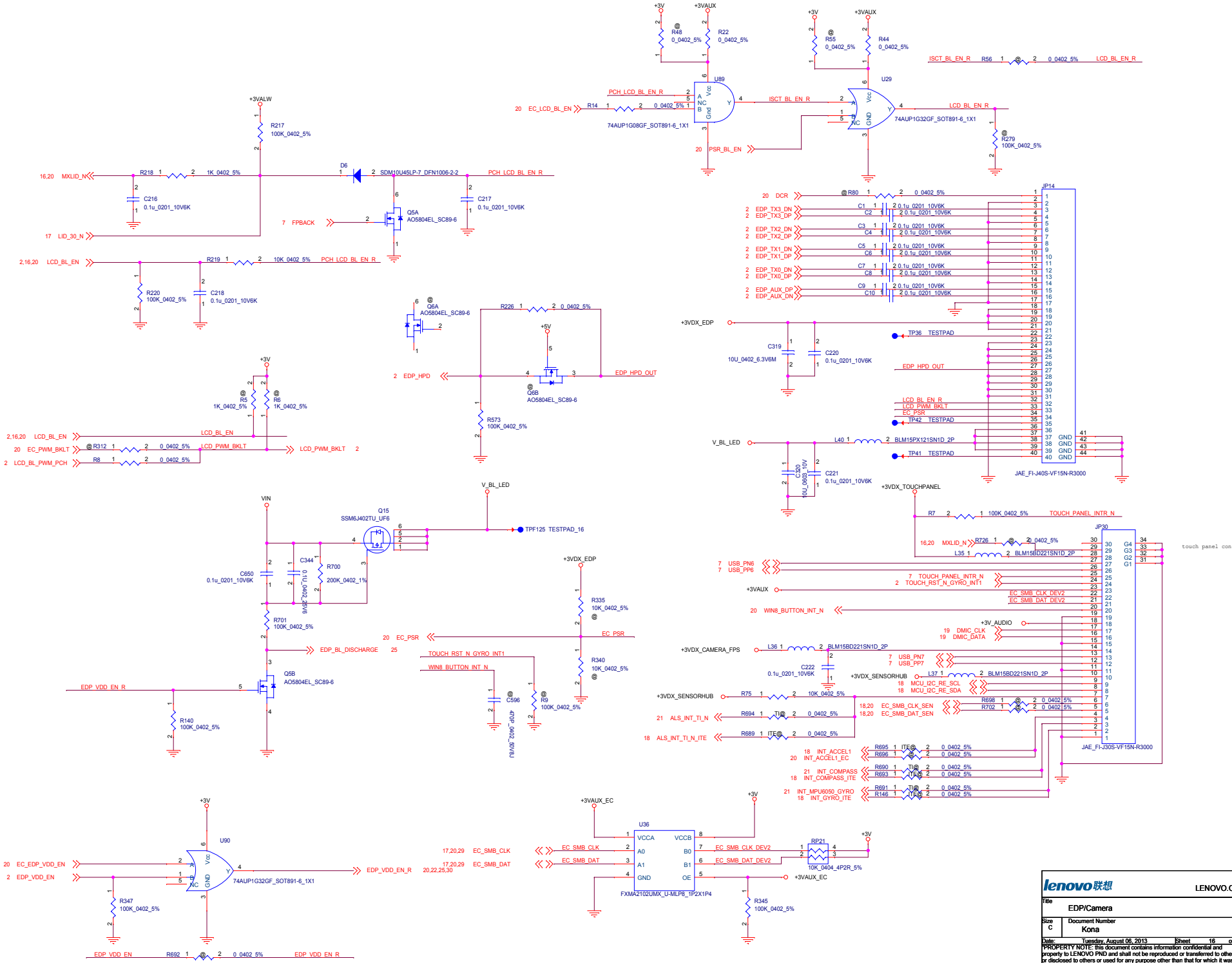
+3V
+3VAUX
R48 0_0402_5%
R22 0_0402_5%
R55 0_0402_5%
R44 0_0402_5%
ISCT_BL_EN_R
R56 0_0402_5%
LCD_BL_EN_R
U89
U29
PCH_LCD_BL_EN_R
20 EC_LCD_BL_EN
R14 0_0402_5%
74AUP1G08GF_SOT891-6_1X1
74AUP1G32GF_SOT891-6_1X1
20 PSR_BL_EN
R279 100K_0402_5%
+3VALW
R217 100K_0402_5%
16,20 MXLID_N
R218 1K_0402_5%
D6 SDM10U45LP-7_DFN1006-2-2
PCH_LCD_BL_EN_R
C216 0.1u_0201_10V6K
C217 0.1u_0201_10V6K
7 FPBACK
Q5A AO5804EL_SC89-6
17 LID_30_N
2,16,20 LCD_BL_EN
R219 10K_0402_5%
R220 100K_0402_5%
C218 0.1u_0201_10V6K
JP14
20 DCR
R80 0_0402_5%
2 EDP_TX3_DN
2 EDP_TX3_DP
2 EDP_TX2_DN
2 EDP_TX2_DP
2 EDP_TX1_DN
2 EDP_TX1_DN
2 EDP_TX0_DN
2 EDP_TX0_DN
2 EDP_AUX_DP
2 EDP_AUX_DN
C1 C2 C3 C4 C5 C6 C7 C8 C9 C10 0.1u_0201_10V6K
+3VDX_EDP
C319 10U_0402_6.3V6M
C220 0.1u_0201_10V6K
TP36 TESTPAD
EDP_HPD_OUT
LCD_BL_EN_R
LCD_PWM_BKLT
EC_PSR
TP42 TESTPAD
V_BL_LED
L40 BLM15PX121SN1D_2P
TP41 TESTPAD
C320 10U_0603_10V
C221 0.1u_0201_10V6K
JAE_FI-J40S-VF15N-R3000
Q6A AO5804EL_SC89-6
R226 0_0402_5%
+5V
2 EDP_HPD
EDP_HPD_OUT
Q6B AO5804EL_SC89-6
R573 100K_0402_5%
R5 1K_0402_5%
R6 1K_0402_5%
2,16,20 LCD_BL_EN
20 EC_PWM_BKLT
R312 0_0402_5%
LCD_PWM_BKLT
2 LCD_BL_PWM_PCH
R8 0_0402_5%
LCD_PWM_BKLT 2
+3VDX_TOUCHPANEL
R7 100K_0402_5%
TOUCH_PANEL_INTR_N
JP30
touch panel con
16,20 MXLID_N
R726 0_0402_5%
L35 BLM15BD221SN1D_2P
7 USB_PN6
7 USB_PP6
7 TOUCH_PANEL_INTR_N
2 TOUCH_RST_N_GYRO_INT1
+3VAUX
EC_SMB_CLK_DEV2
EC_SMB_DAT_DEV2
20 WIN8_BUTTON_INT_N
+3V_AUDIO
19 DMIC_CLK
19 DMIC_DATA
+3VDX_CAMERA_FPS
L36 BLM15BD221SN1D_2P
C222 0.1u_0201_10V6K
7 USB_PN7
7 USB_PP7
+3VDX_SENSORHUB
L37 BLM15BD221SN1D_2P
18 MCU_I2C_RE_SCL
18 MCU_I2C_RE_SDA
R75 10K_0402_5%
R698 0_0402_5%
R702 0_0402_5%
18,20 EC_SMB_CLK_SEN
18,20 EC_SMB_DAT_SEN
21 ALS_INT_TI_N
R694 0_0402_5%
18 ALS_INT_TI_N_ITE
R689 0_0402_5%
R695 0_0402_5%
R696 0_0402_5%
18 INT_ACCEL1
20 INT_ACCEL1_EC
R690 0_0402_5%
R693 0_0402_5%
21 INT_COMPASS
18 INT_COMPASS_ITE
R691 0_0402_5%
R146 0_0402_5%
21 INT_MPU6050_GYRO
18 INT_GYRO_ITE
JAE_FI-J30S-VF15N-R3000
VIN
Q15 SSM6J402TU_UF6
V_BL_LED
TPF125 TESTPAD_16
C650 0.1u_0201_10V6K
C344 0.1u_0402_25V6K
R700 200K_0402_1%
R701 100K_0402_5%
EDP_BL_DISCHARGE 25
+3VDX_EDP
R335 10K_0402_5%
20 EC_PSR
EC_PSR
R340 10K_0402_5%
TOUCH_RST_N_GYRO_INT1
WIN8_BUTTON_INT_N
C596 47pF_0402_50V8J
R9 100K_0402_5%
EDP_VDD_EN_R
Q5B AO5804EL_SC89-6
R140 100K_0402_5%
U90
20 EC_EDP_VDD_EN
2 EDP_VDD_EN
74AUP1G32GF_SOT891-6_1X1
EDP_VDD_EN_R
R347 100K_0402_5%
EDP_VDD_EN
R692 0_0402_5%
EDP_VDD_EN_R
+3VAUX_EC
U36
17,20,29 EC_SMB_CLK
17,20,29 EC_SMB_DAT
EC_SMB_CLK
EC_SMB_DAT
EC_SMB_CLK_DEV2
EC_SMB_DAT_DEV2
RP21 10K_0404_4P2R_5%
FXMA2102UMX_U-MLP8_1P2X1P4
R345 100K_0402_5%
lenovo联想
LENOVO.CRDN
Title
EDP/Camera
Size C
Document Number
Kona
Rev V1.0
Date: Tuesday, August 06, 2013
Sheet 16 of 34
"PROPERTY NOTE: this document contains information confidential and property to LENOVO PND and shall not be reproduced or transferred to other documents or disclosed to others or used for any purpose other than that for which it was obtained without the expressed written consent of LENOVO PND."

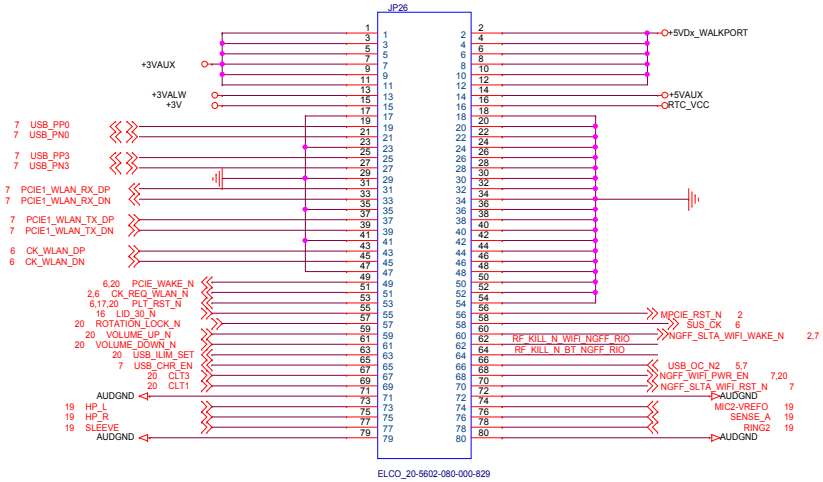

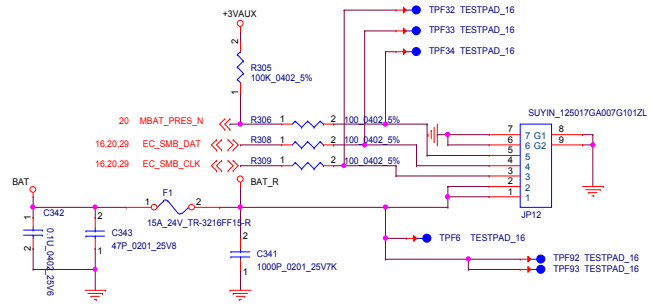

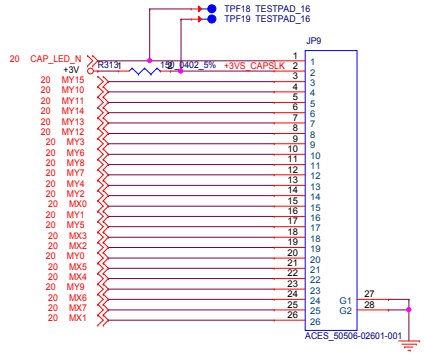

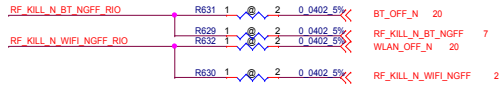

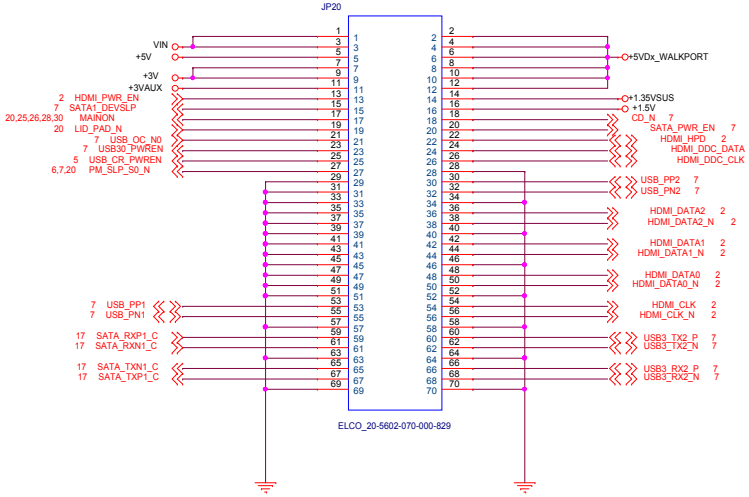

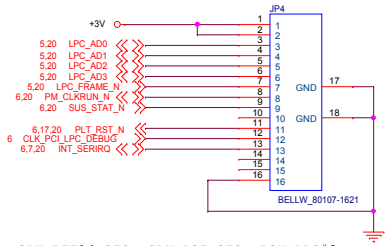

删除了，CLK_REF14_SIO: CLK_PCI_SIO: PCH_DRQ#0

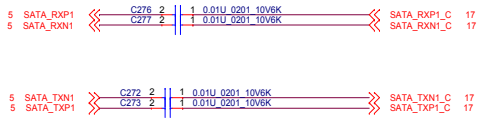

lenovo联想 LENOVO.CRDN

Title: Connector (BTB,Bat,LPC,KB)

Size: C | Document Number: Kona | Rev: V1.0

Date: Tuesday, August 06, 2013 | Sheet 17 of 34

"PROPERTY NOTE: this document contains information confidential and property to LENOVO PND and shall not be reproduced or transferred to other documents or disclosed to others or used for any purpose other than that for which it was obtained without the expressed written consent of LENOVO PND."

Note 1 : Since all GPIO belong to VSTBY power domain
Note 2 :
(1) Each input pin should be driven or pulled.
(2) Each output-drain output pin should be pulled.

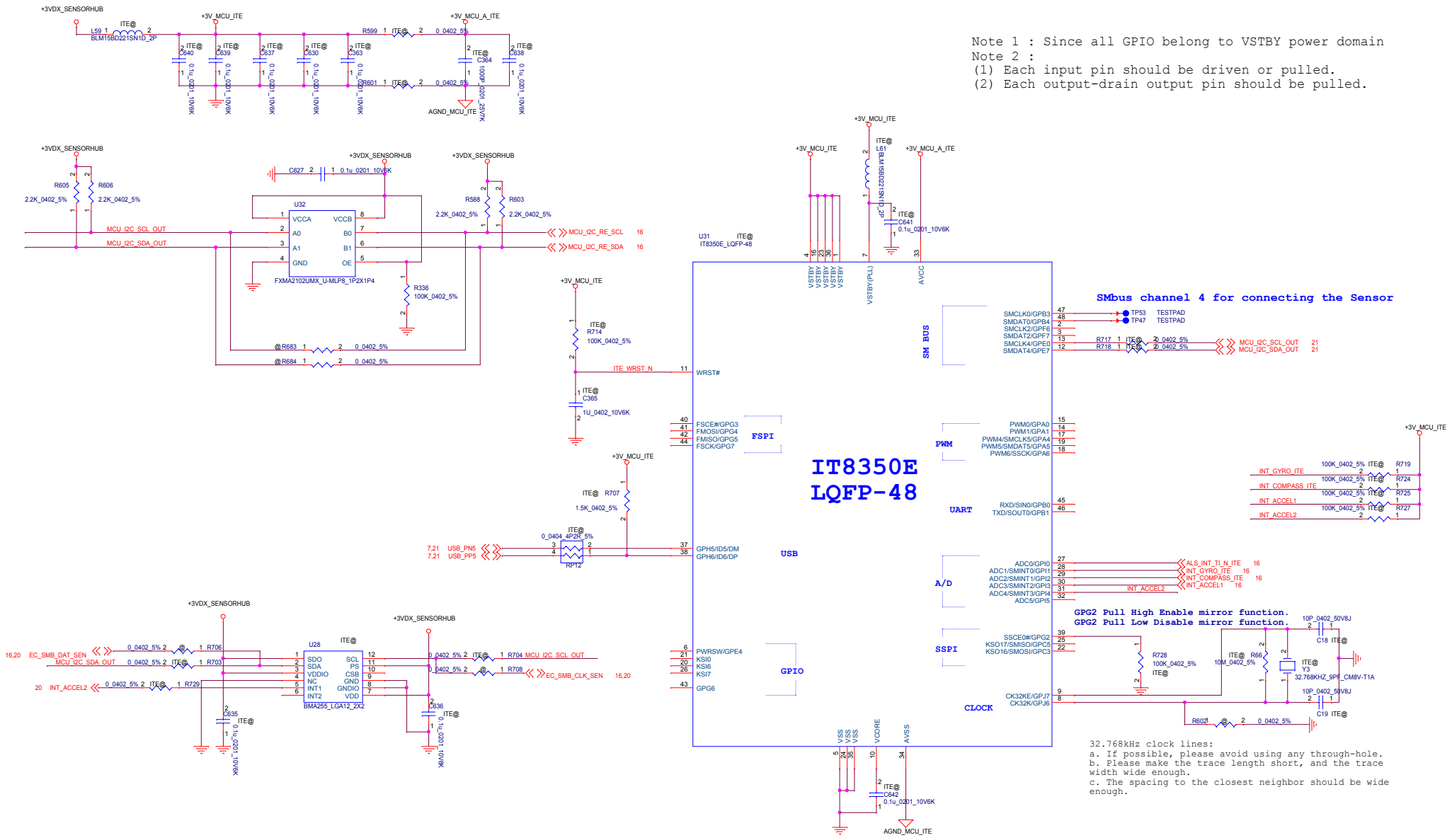

32.768kHz clock lines:
a. If possible, please avoid using any through-hole.
b. Please make the trace length short, and the trace width wide enough.
c. The spacing to the closest neighbor should be wide enough.

lenovo联想 LENOVO.CRDN

Title: SENSOR(ITE)

Size: C | Document Number: Kona | Rev: V1.0

Date: Tuesday, August 06, 2013 | Sheet 18 of 34

"PROPERTY NOTE: this document contains information confidential and property to LENOVO PND and shall not be reproduced or transferred to other documents or disclosed to others or used for any purpose other than that for which it was obtained without the expressed written consent of LENOVO PND."

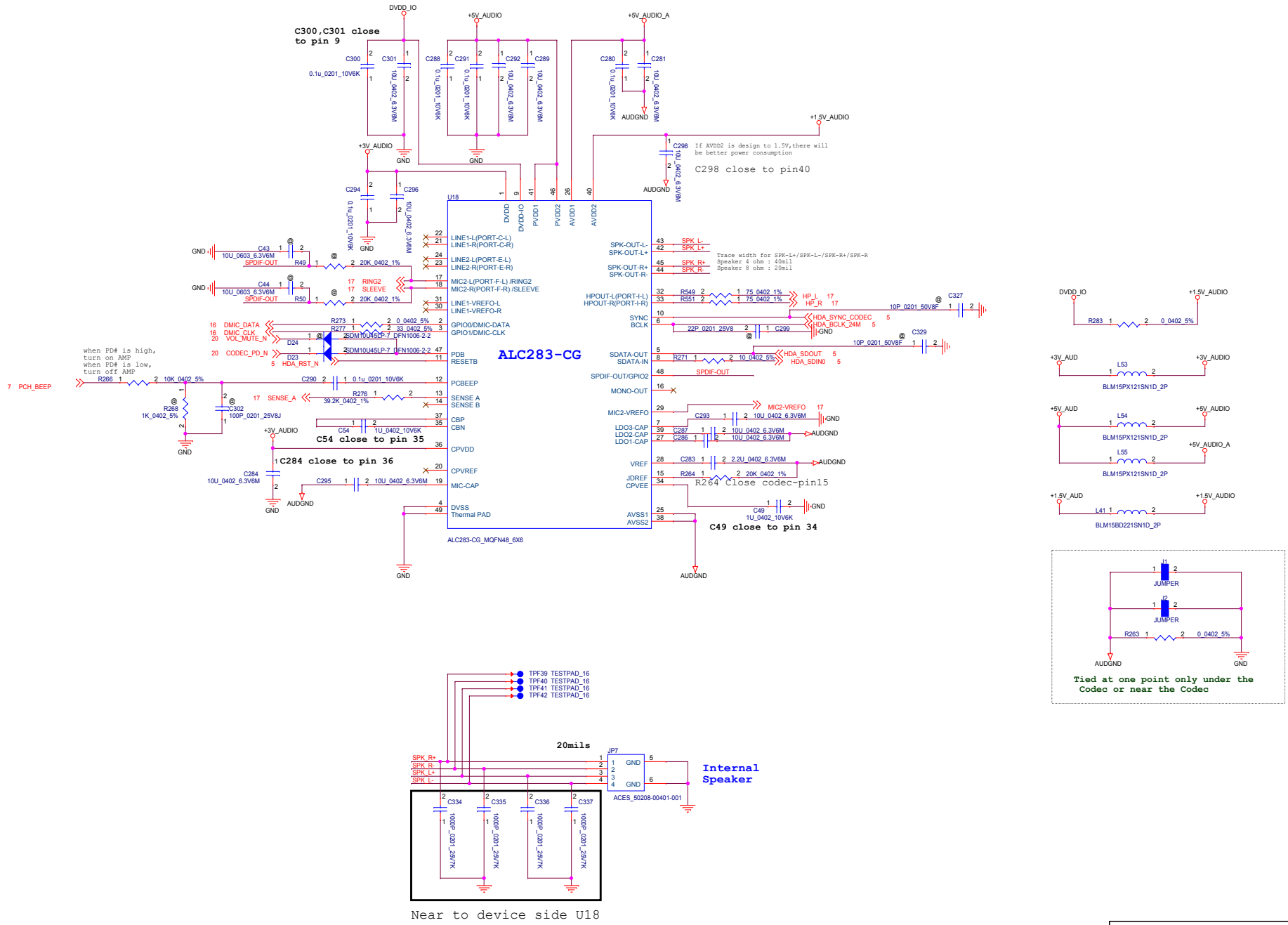

lenovo联想 LENOVO.CRDN

Title: AUDIO CODEC

Size: C | Document Number: Kona | Rev: V1.0

Date: Tuesday, August 06, 2013 | Sheet 19 of 34

"PROPERTY NOTE: This document contains information confidential and property to LENOVO PND and shall not be reproduced or transferred to other documents or disclosed to others or used for any purpose other than that for which it was obtained without the expressed written consent of LENOVO PND."

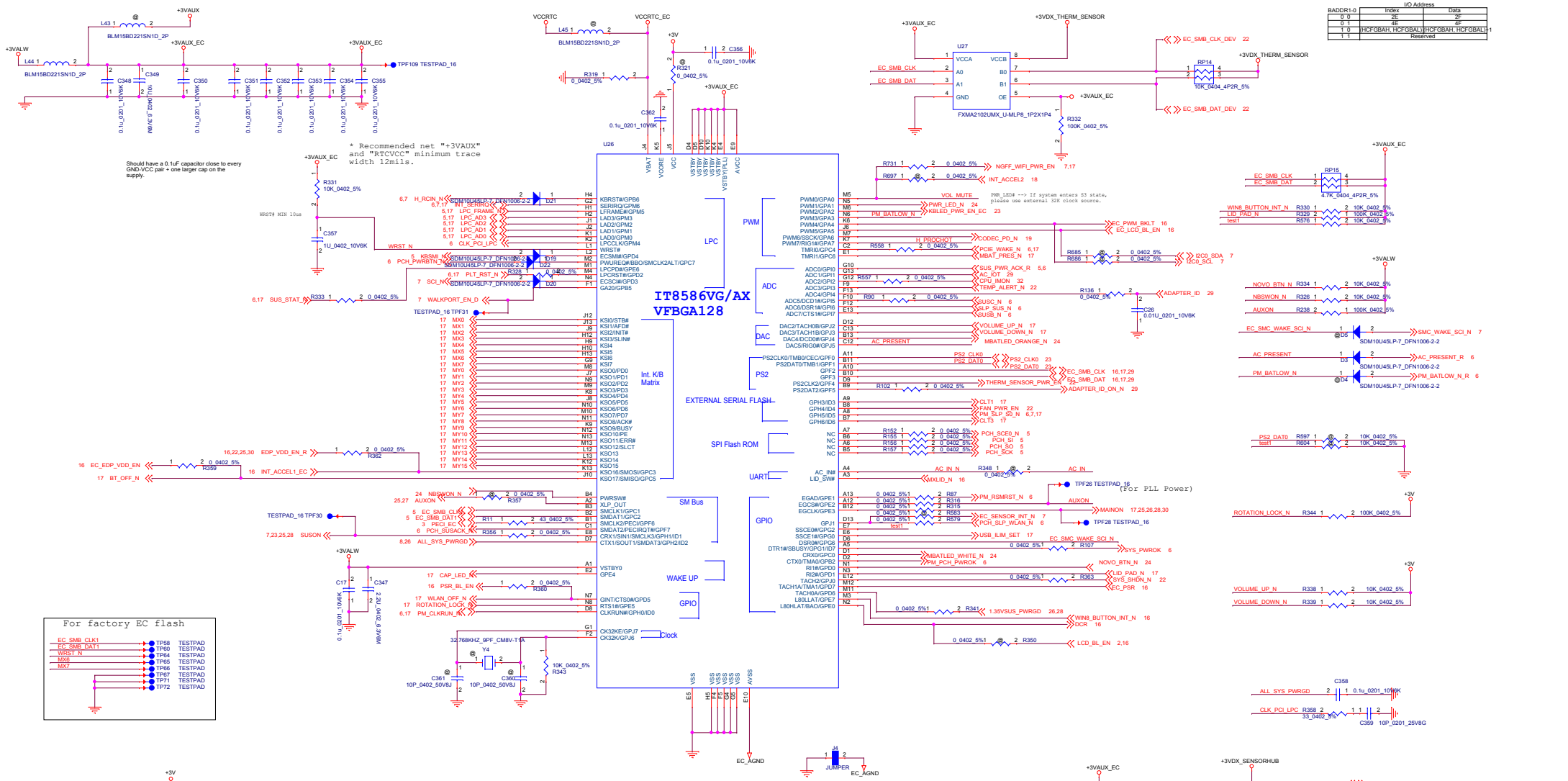

SHBM=1: Enable shared memory with host BIOS

I/O Address

BADDR1-0	Index	Data
0 0	2E	2F
0 1	4E	4F
1 0	(HCFGBAH, HCFGBAL)	(HCFGBAH, HCFGBAL)+1
1 1	Reserved	

Note 1 : Since all GPIO belong to VSTBY power domain, and there are some special considerations below:
(1) If it is output to external VCC derived power domain circuit, this signal should be isolated by a diode such as KBRST# and GA20.
(2) If it is input from external VCC derived power domain circuit, this external circuit must consider not to float the GPIO input.

Note 2 :
(1) Each input pin should be driven or pulled.
(2) Each output-drain output pin should be pulled.

lenovo联想 LENOVO.CRDN

Title: EC/BIOS

Size: Custom | Document Number: Kona | Rev V1.0

Date: Tuesday, August 06, 2013 | Sheet 20 of 34

PROPERTY NOTE: This document contains information confidential and property to LENOVO PND and shall not be reproduced or transferred to other documents or disclosed to others or used for any purpose other than that for which it was obtained without the expressed written consent of LENOVO PND."

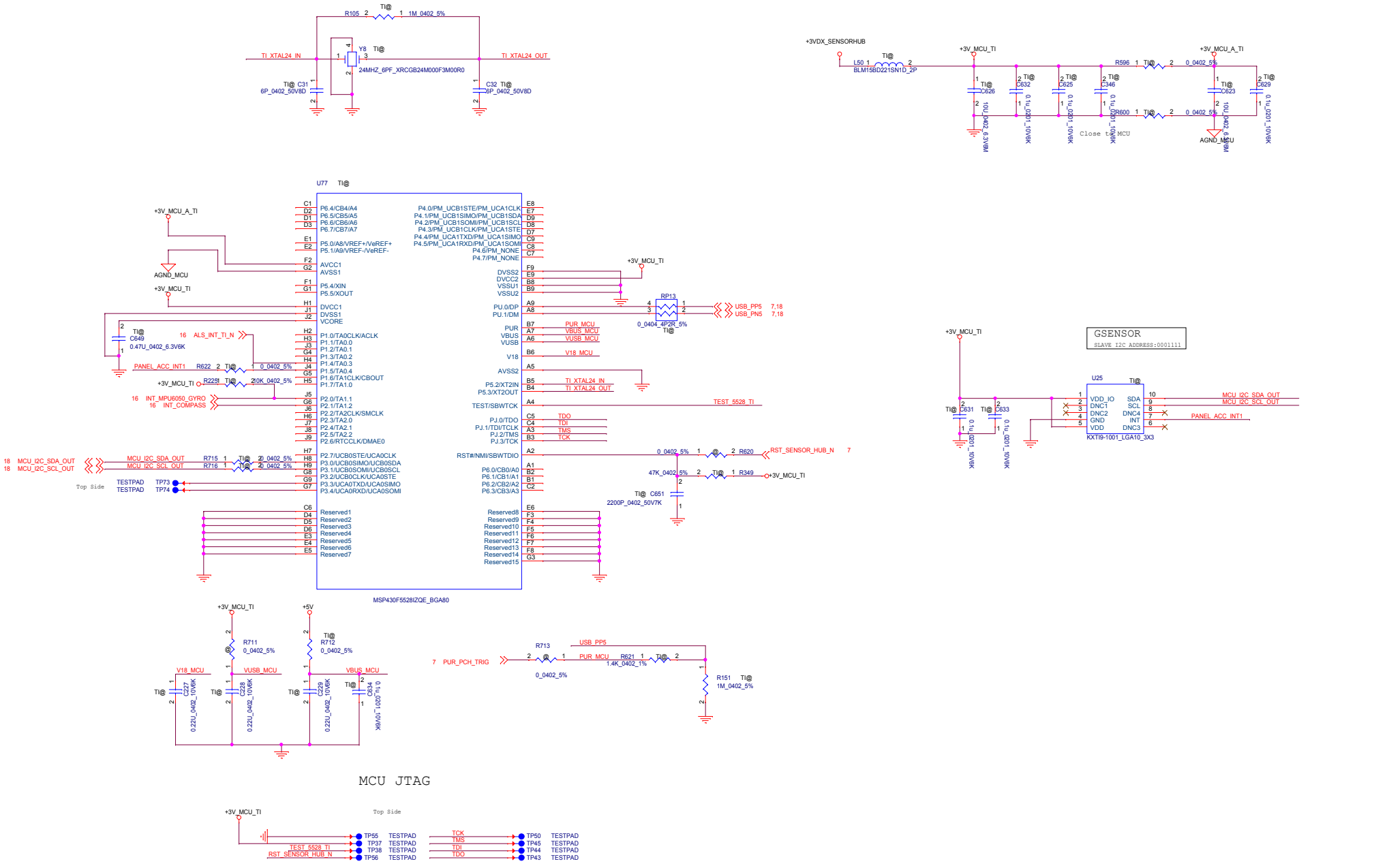

lenovo联想 LENOVO.CRDN

Title: SENSOR (TI)

Size: C | Document Number: Kona | Rev V1.0

Date: Friday, August 09, 2013 | Sheet 21 of 34

"PROPERTY NOTE: this document contains information confidential and property to LENOVO PND and shall not be reproduced or transferred to other documents or disclosed to others or used for any purpose other than that for which it was obtained without the expressed written consent of LENOVO PND."

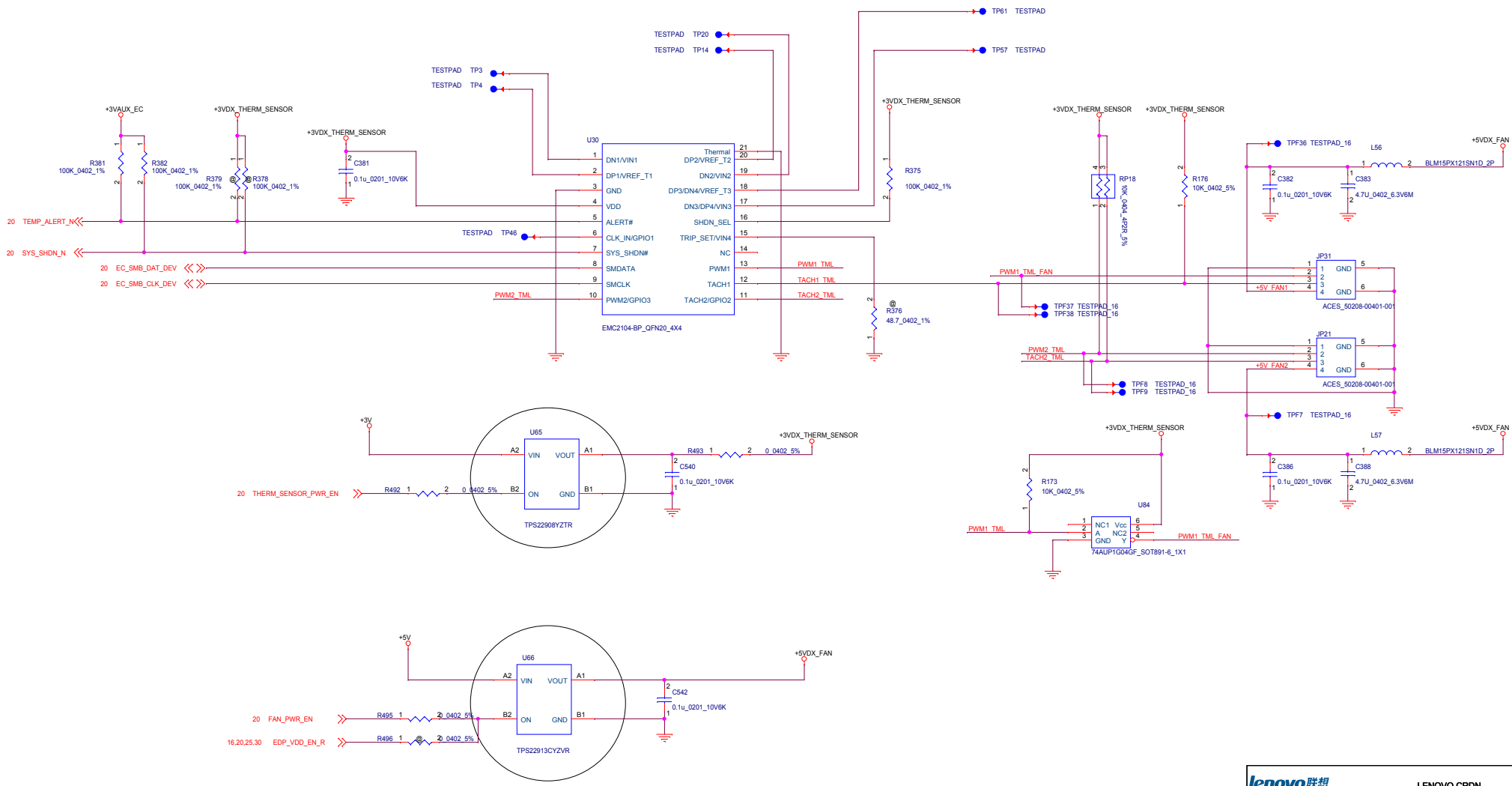

lenovo联想 LENOVO.CRDN

Title: Thermal Sensor

Size: C | Document Number: Kona | Rev: V1.0

Date: Tuesday, August 06, 2013 | Sheet 22 of 34

"PROPERTY NOTE: this document contains information confidential and property to LENOVO PND and shall not be reproduced or transferred to other documents or disclosed to others or used for any purpose other than that for which it was obtained without the expressed written consent of LENOVO PND."

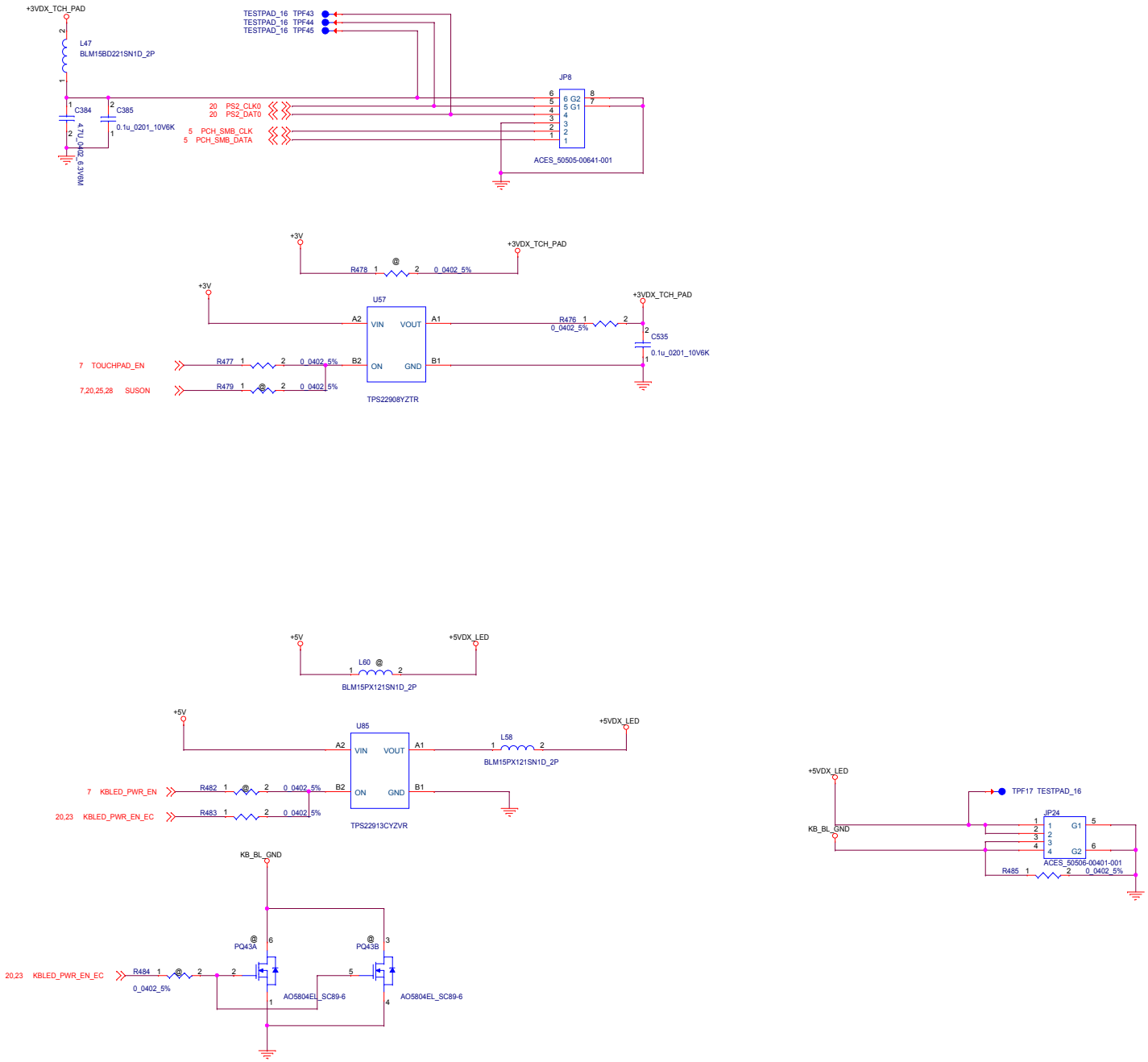

lenovo联想 LENOVO.CRDN

Title: TP/SWITCH/Thermal

Size: C | Document Number: Kona | Rev V1.0

Date: Tuesday, August 06, 2013 | Sheet 23 of 34

"PROPERTY NOTE: this document contains information confidential and property to LENOVO PND and shall not be reproduced or transferred to other documents or disclosed to others or used for any purpose other than that for which it was obtained without the expressed written consent of LENOVO PND."

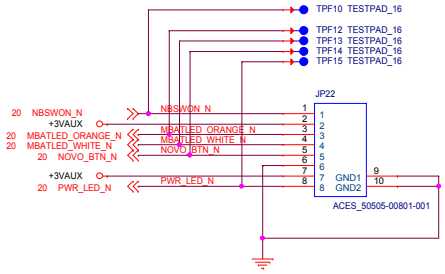

lenovo联想 LENOVO.CRDN

Title: PWR/LED

Size: C | Document Number: Kona | Rev: V1.0

Date: Tuesday, August 06, 2013 | Sheet 24 of 34

"PROPERTY NOTE: this document contains information confidential and property to LENOVO PND and shall not be reproduced or transferred to other documents or disclosed to others or used for any purpose other than that for which it was obtained without the expressed written consent of LENOVO PND."

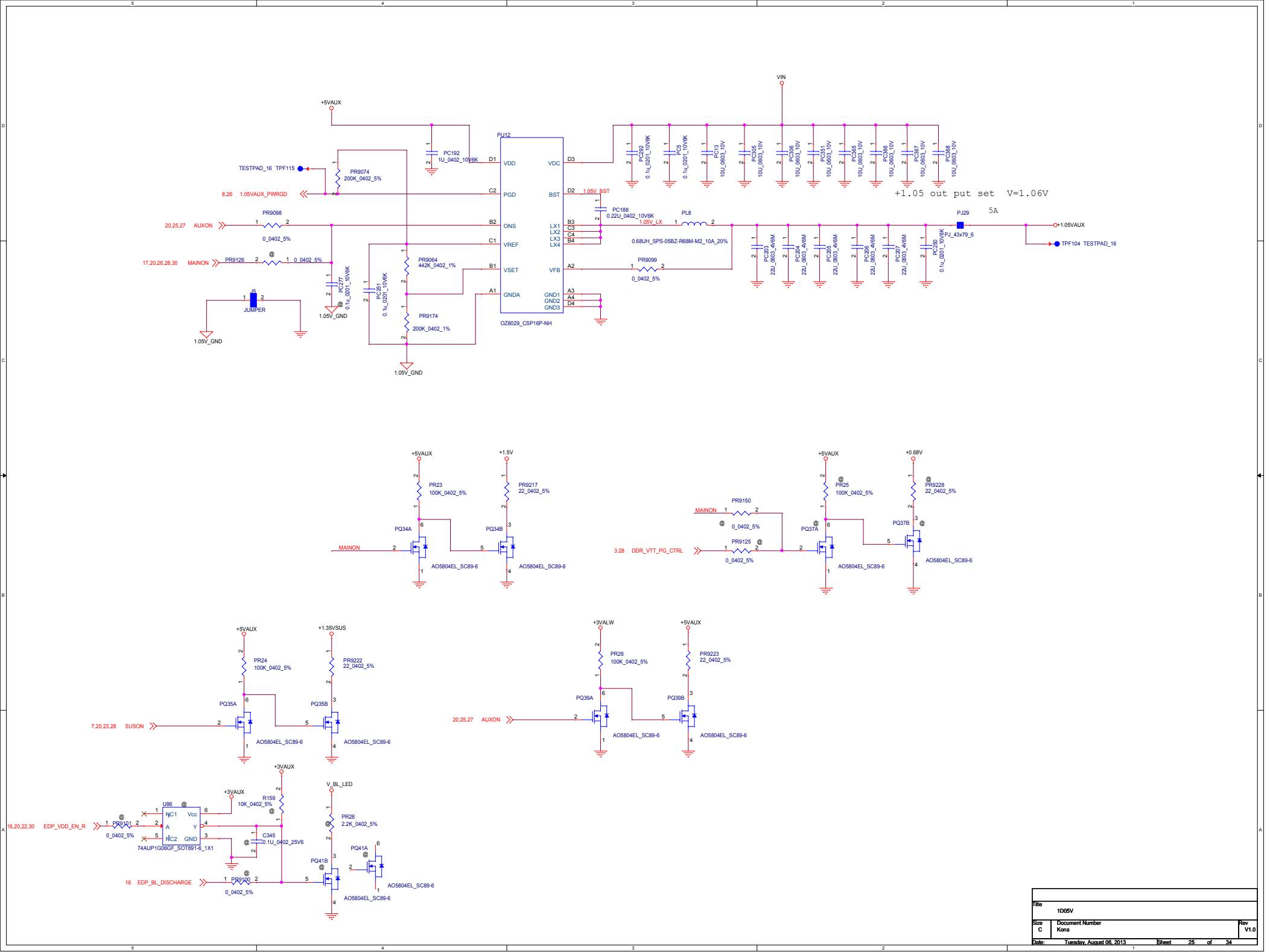

Title	1D05V	
Size C	Document Number Kona	Rev V1.0
Date: Tuesday, August 06, 2013	Sheet 25 of 34	

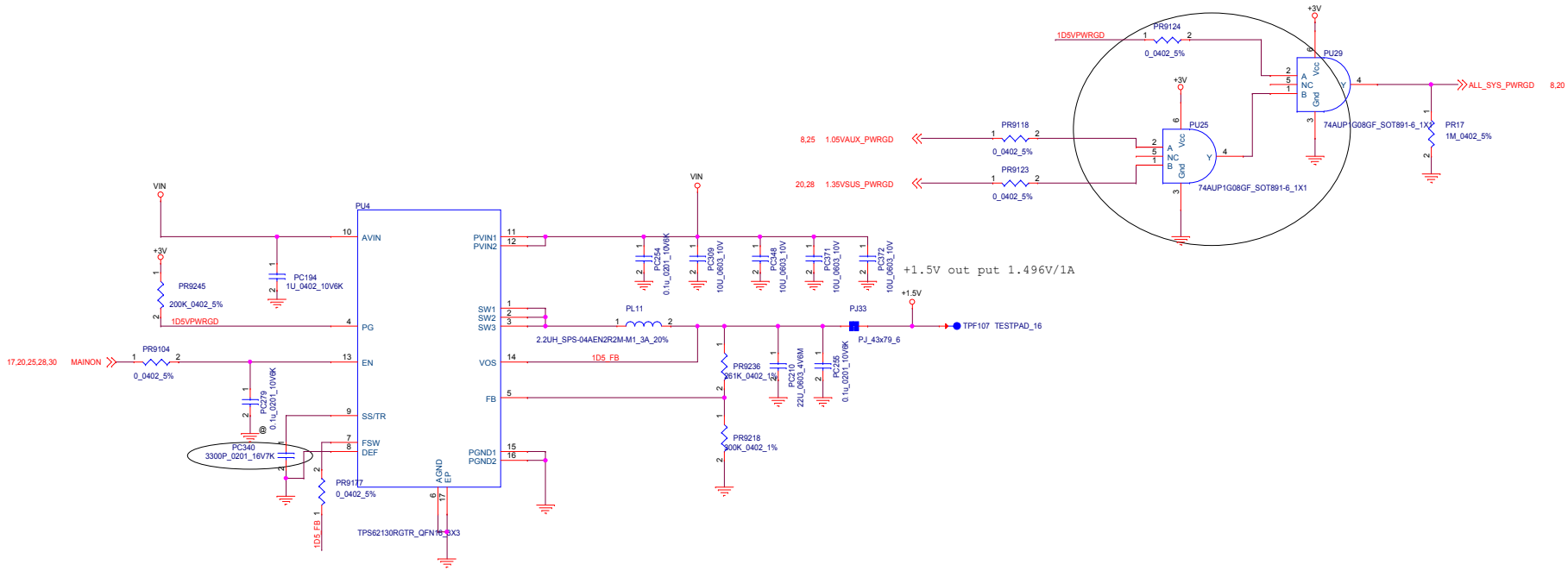

Title	1D8VSUS/1D5V		
Size C	Document Number Kona		Rev V1.0
Date: Tuesday, August 06, 2013	Sheet 26 of 34		

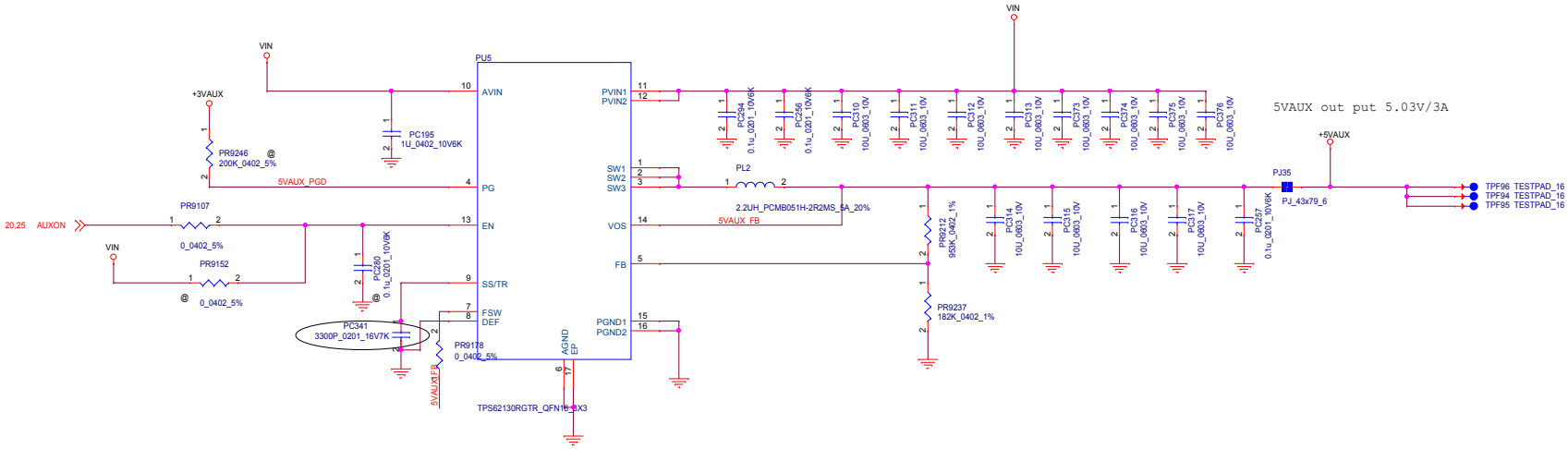

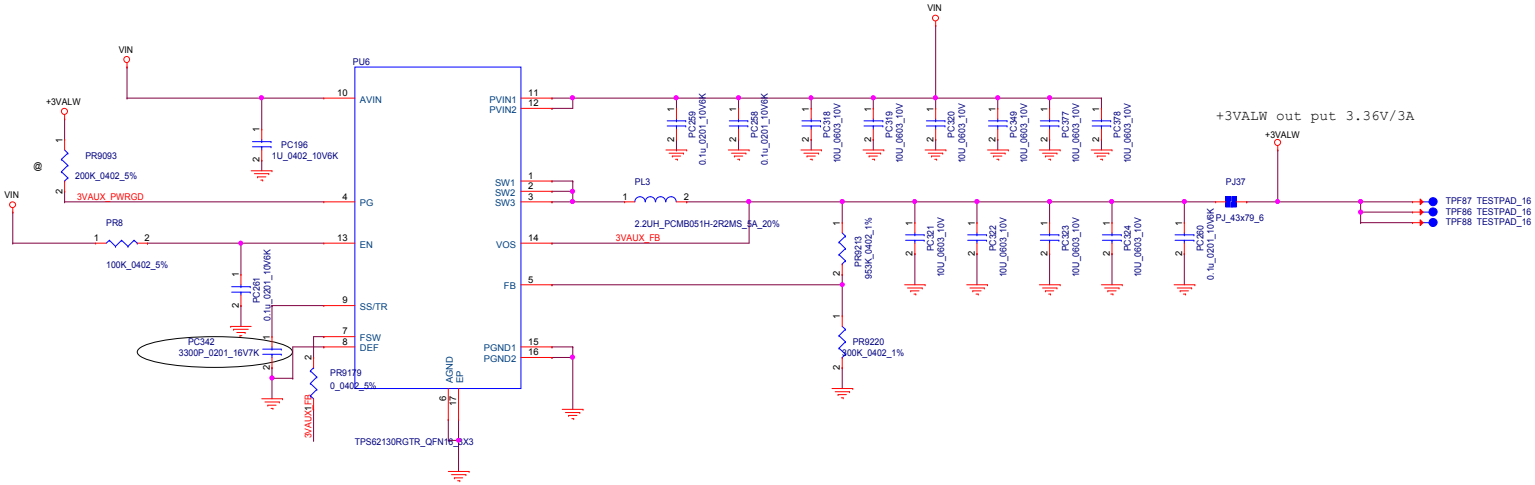

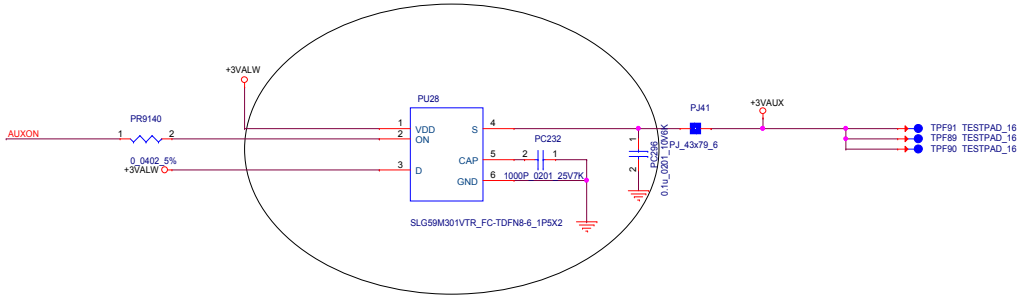

Title	5VAUX/3VAUX/3VALW	
Size C	Document Number Kona	Rev V1.0
Date: Tuesday, August 06, 2013	Sheet 27 of 34	

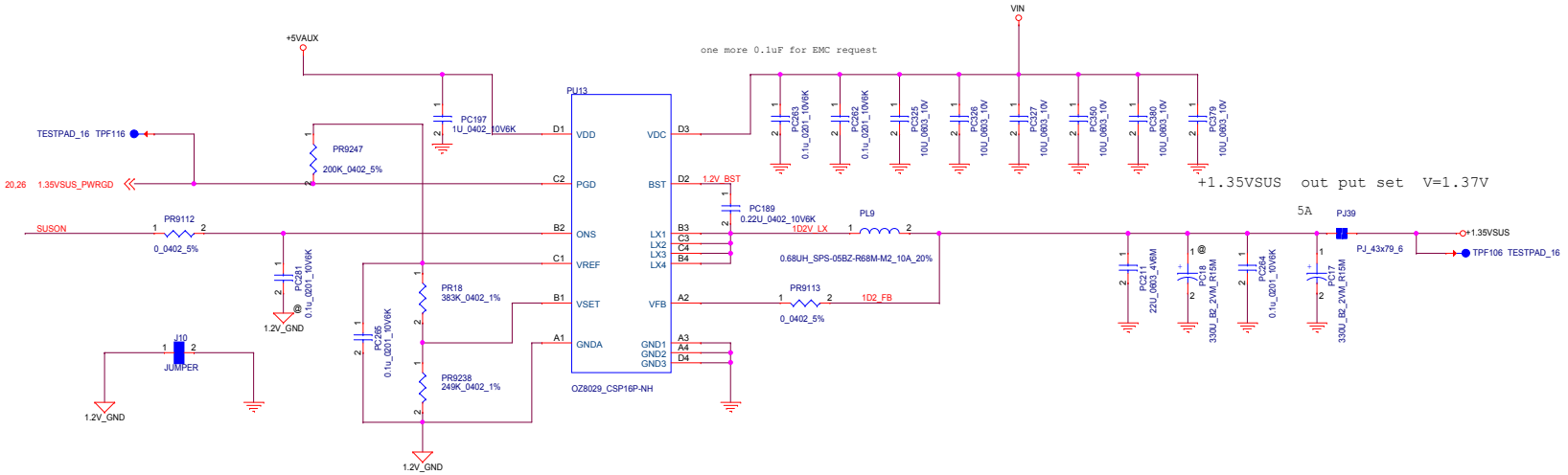

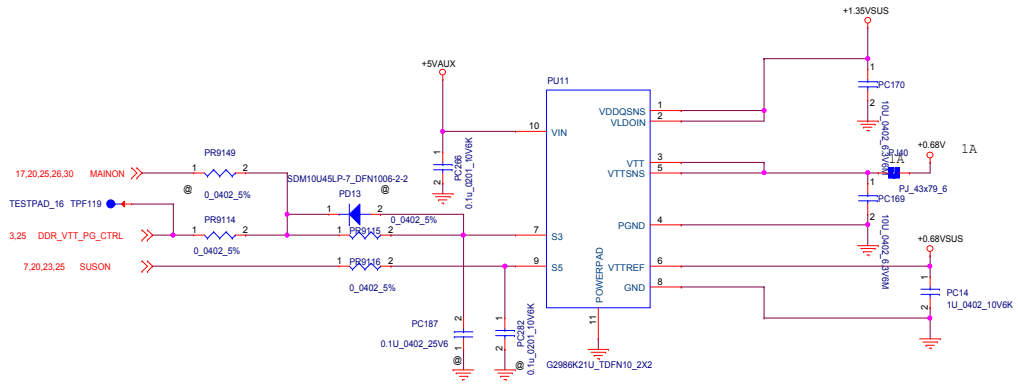

Title	DDR1D2V/0D6V	
Size C	Document Number Kona	Rev V1.0
Date: Tuesday, August 06, 2013	Sheet 28 of 34	

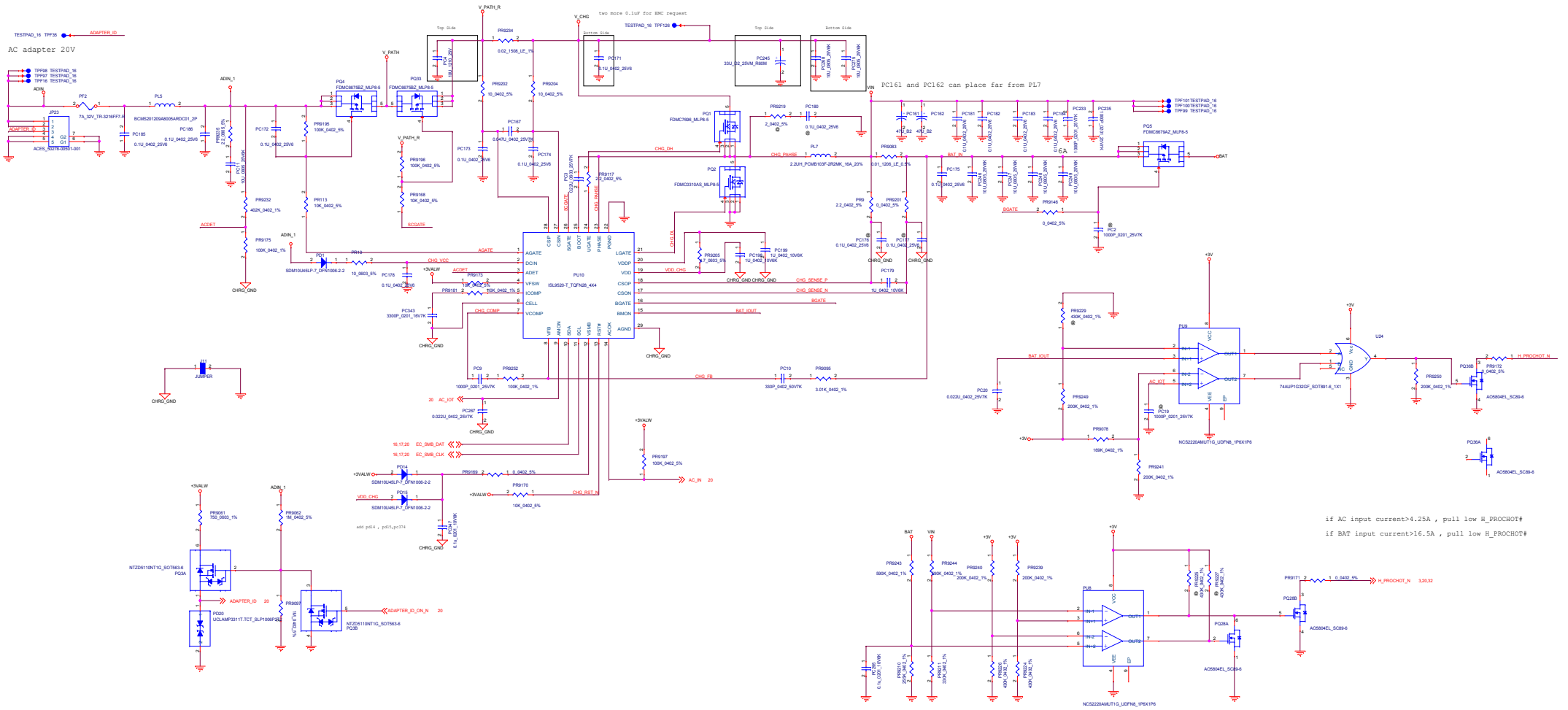

Title	NVDC charger		
Size D	Document Number Kona		Rev V1.0
Date: Tuesday, August 06, 2013		Sheet 29 of 34	

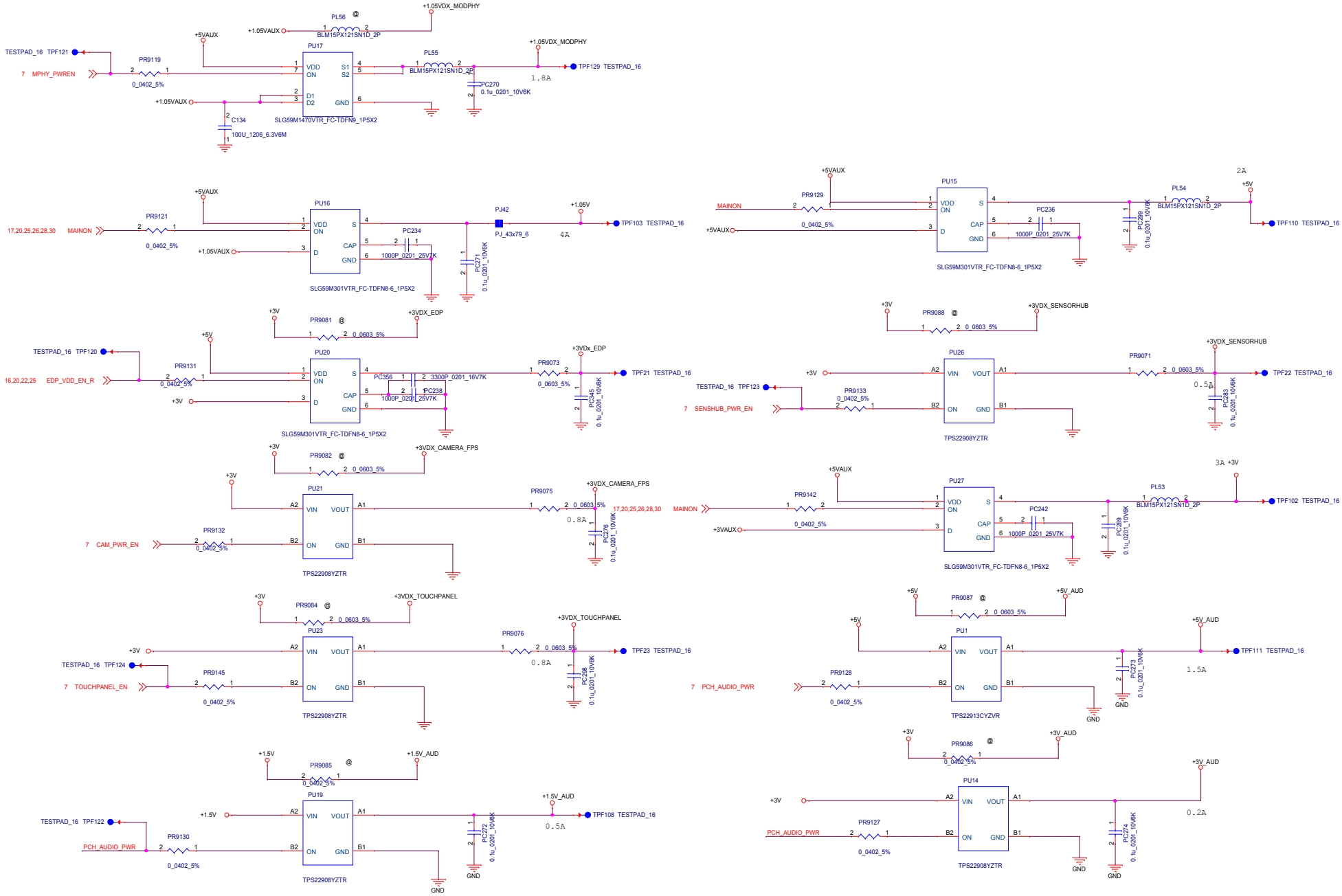

Title	SWITCH POWER	
Size C	Document Number Kona	Rev V1.0
Date: Tuesday, August 06, 2013	Sheet 30 of 34	

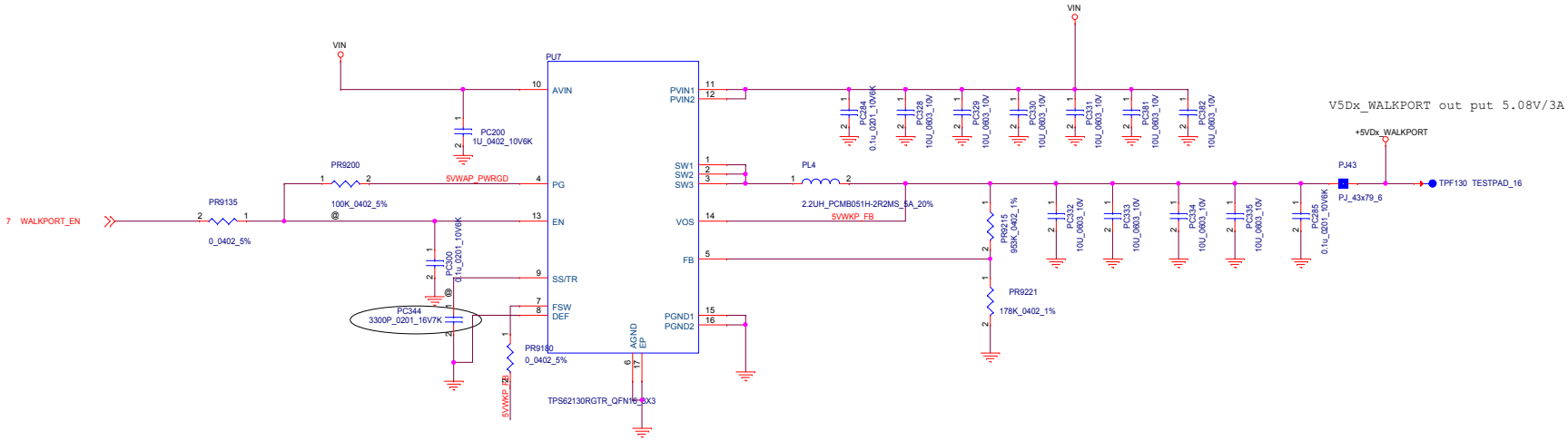

Title	V5Dx_WALKPORT/V3.3Dx_SSD	
Size C	Document Number Kona	Rev V1.0
Date: Tuesday, August 06, 2013	Sheet 31 of 34	

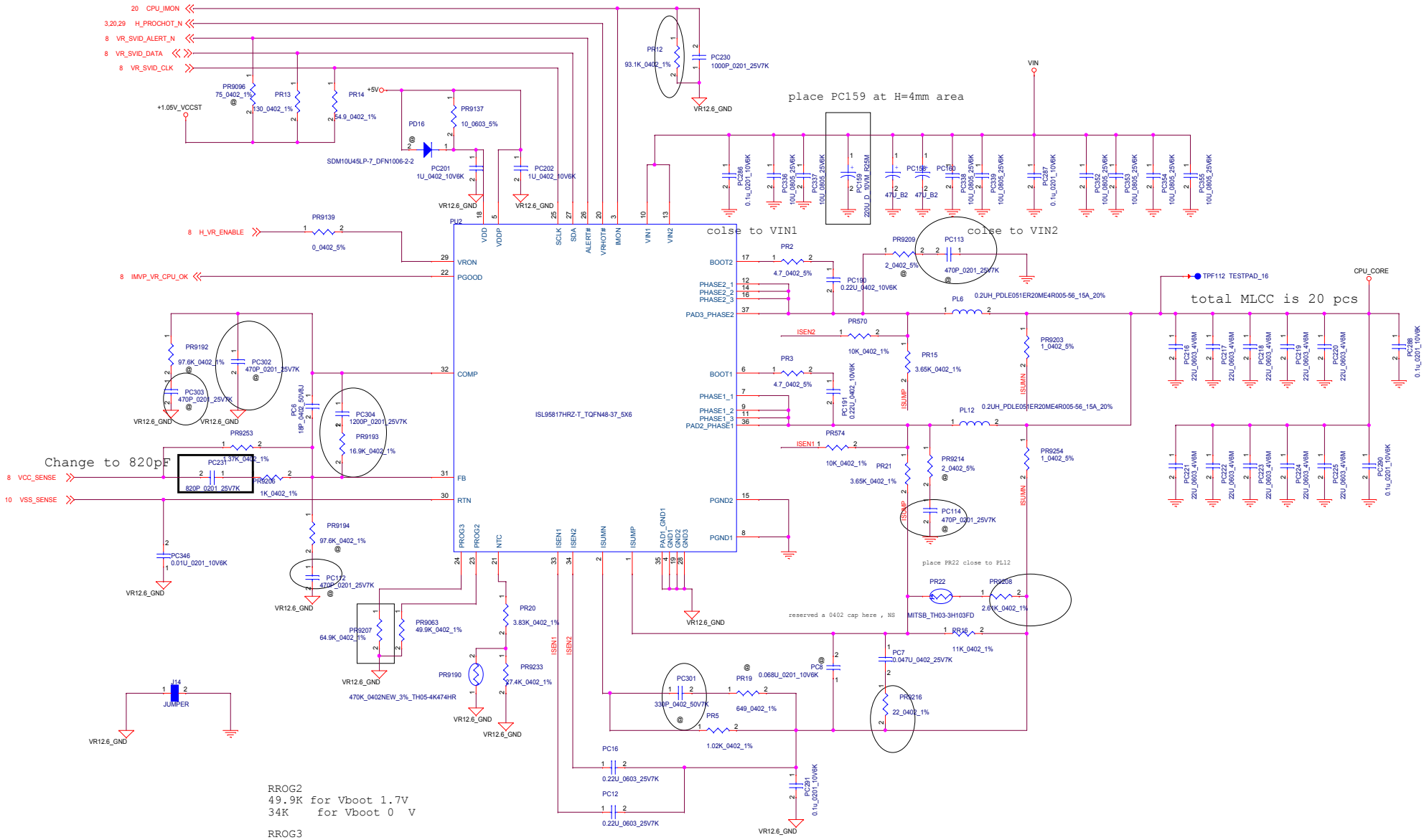

RROG2
49.9K for Vboot 1.7V
34K for Vboot 0 V

RROG3
64.9K for slew rate 53mV/us ,frquency 350/700KHz

Title	VR12.6	
Size C	Document Number Kona	Rev V1.0
Date: Tuesday, August 06, 2013	Sheet 32 of 34	

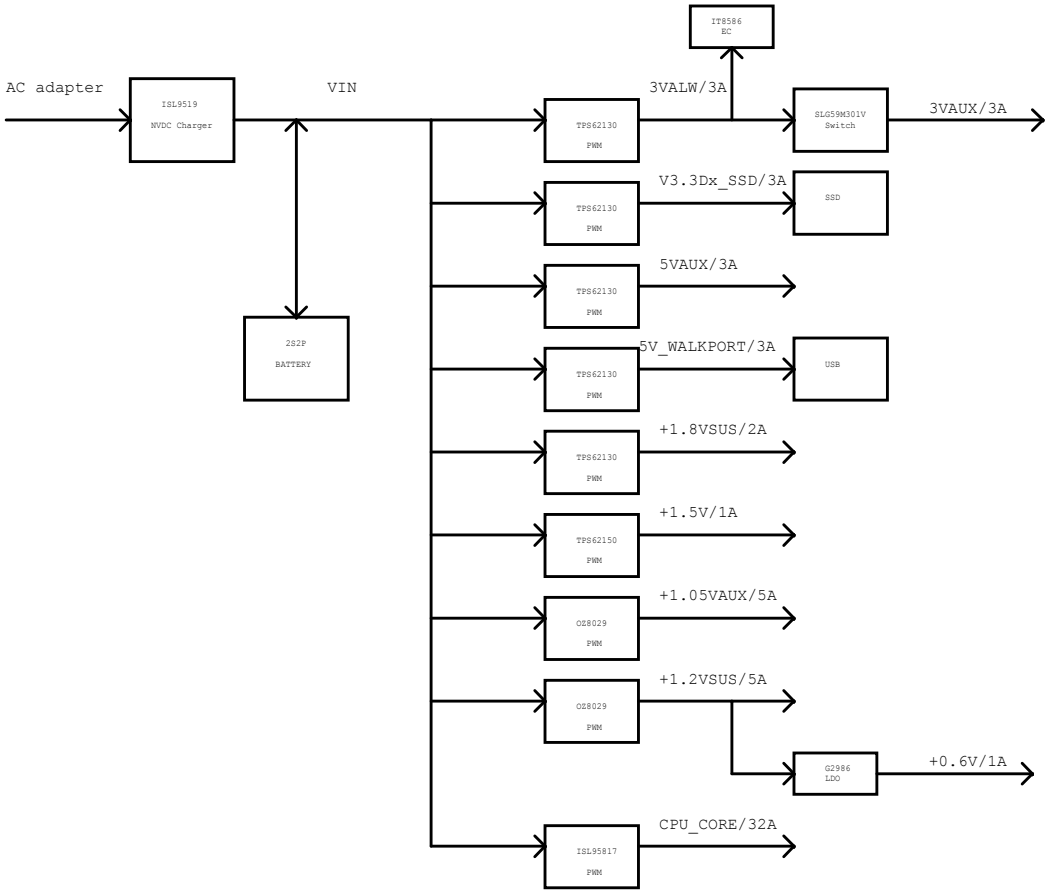

	VCCRTC	VIN	+3VALW	+3VAUX +5VAUX +1.05VAUX	+1.35VSUS +0.68VSUS	+3V/+5V +1.5V/+1.05V +V1.05_VCCST DDR3_VTT CPU_CORE
S0	V	V	V	V	V	V
S3	V	V	V	V	V	X
S4/S5(AC)	V	V	V	V	X	X
S4/S5(DC)	V	V	V	X	X	X
G3	V	X	X	X	X	X

	SUSC# (SLP_S4)	SUSB# (SLP_S3)	+VALW	+VAUX	+VSUS	+V
S0	V	V	V	V	V	V
S3	V	X	V	V	V	X
S4/S5(AC)	X	X	V	V	X	X
S4/S5(DC)	X	X	V	X	X	X
G3	X	X	X	X	X	X

Title	Power Block Diagram	
Size C	Document Number Kona	Rev V1.0
Date: Tuesday, August 06, 2013	Sheet 33 of 34	

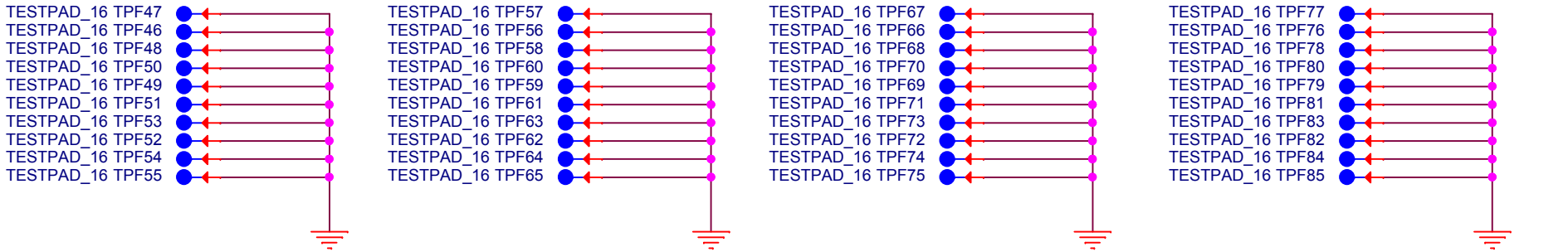

Put these 20 test point to TOP

Put these 20 test point to Bottom

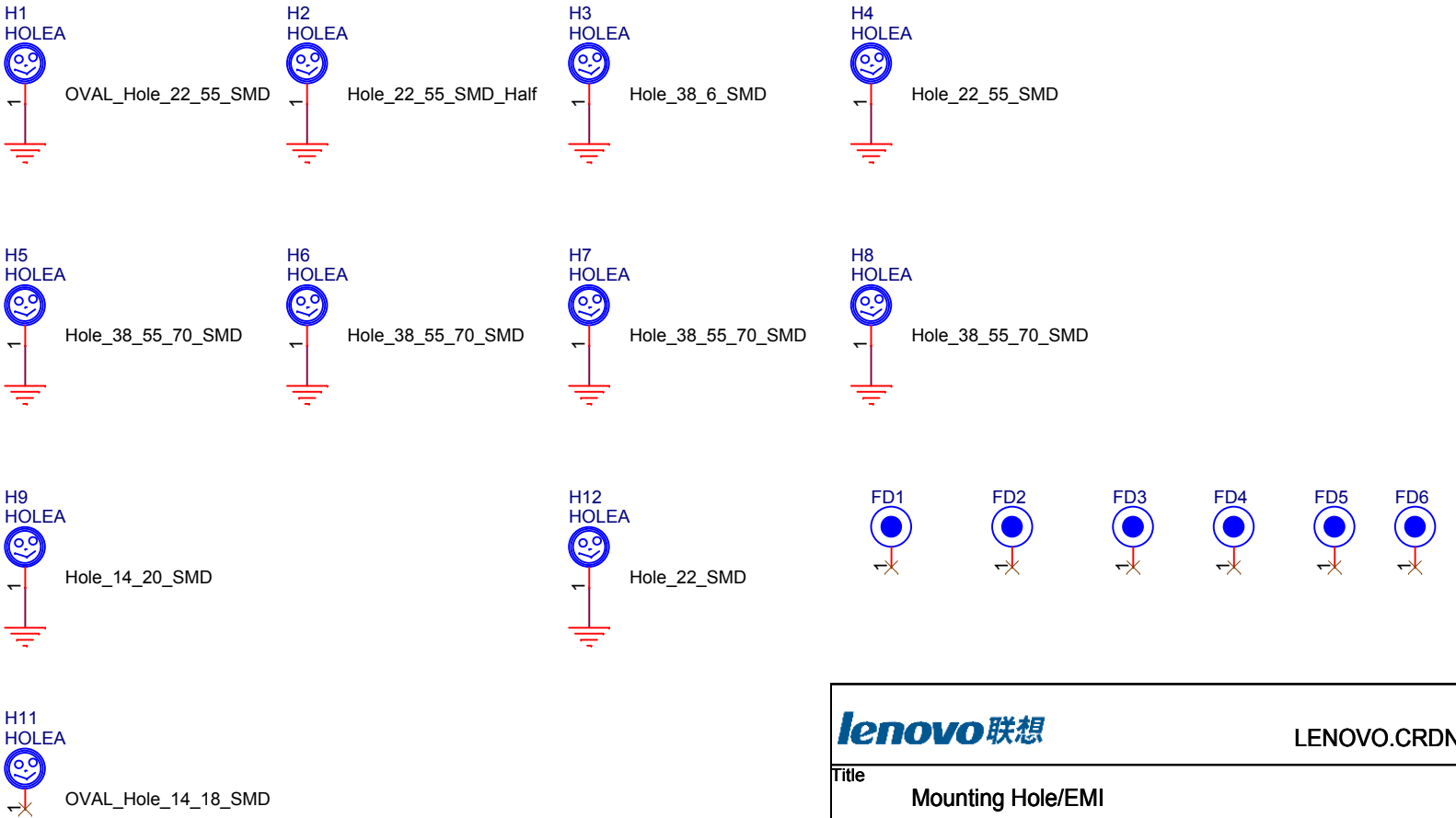

lenovo联想 LENOVO.CRDN

Title	Mounting Hole/EMI	
Size A	Document Number Kona	Rev V1.0
Date: Tuesday, August 06, 2013	Sheet 34 of 34	

"PROPERTY NOTE: this document contains information confidential and property to LENOVO PND and shall not be reproduced or transferred to other documents or disclosed to others or used for any purpose other than that for which it was obtained without the expressed written consent of LENOVO PND."