Model Name : Bellemere_BE
Compal Project Name : B5W1E
File Name : LA-D121P

Compal Confidential

B5W1E Schematics Document

AMD "Beema" Platform

AMD 15W APU With Puma+ Core

LA-D121P REV: 1.0

2015-04-16

Compal Confidential

Model Name : B5W1E
B5W1K
B5W1R

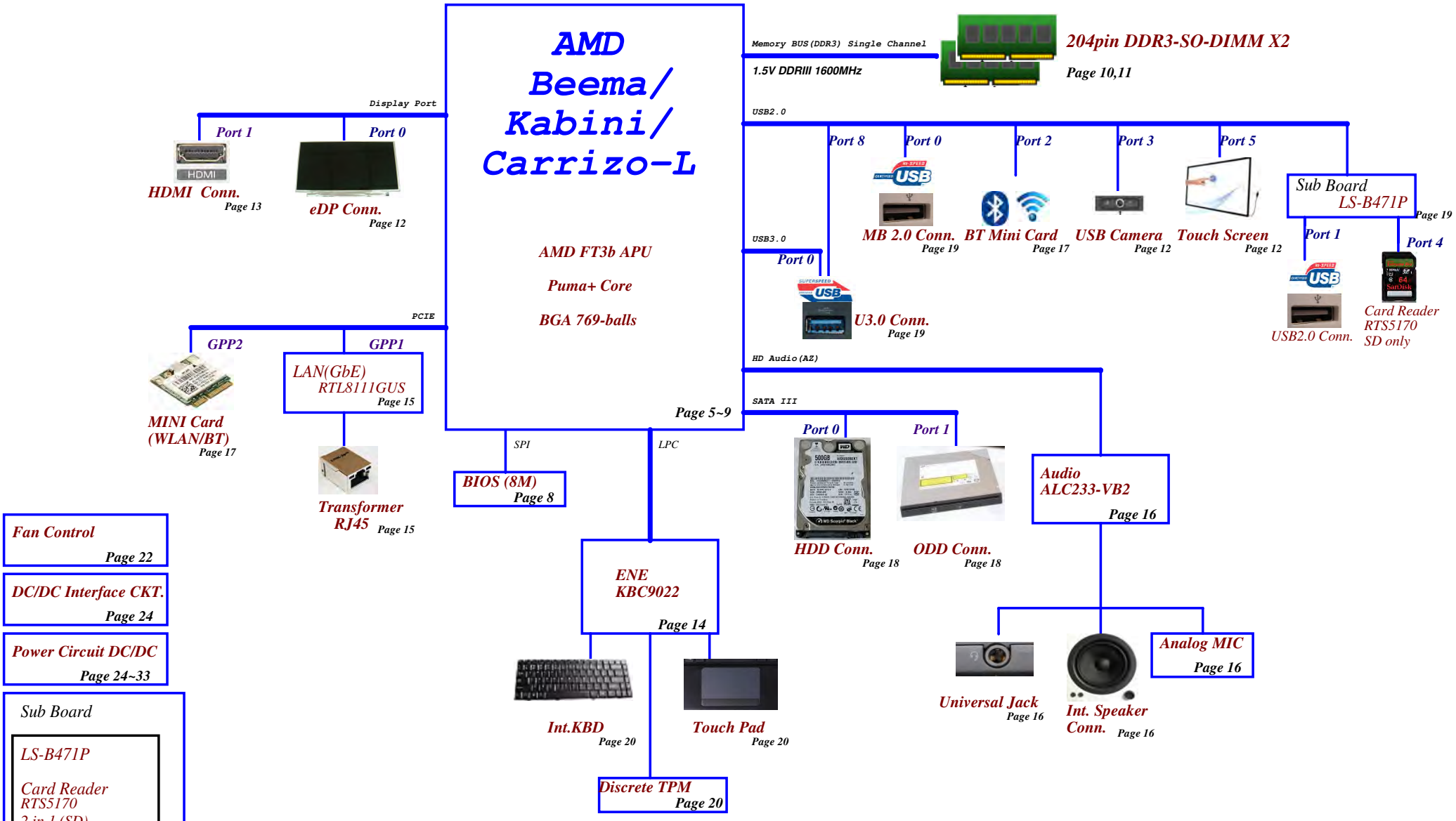

Security Classification	Compal Secret Data		
Issued Date	2014/03/27	Deciphered Date	2016/03/27

THIS SHEET OF ENGINEERING DRAWING IS THE PROPRIETARY PROPERTY OF COMPAL ELECTRONICS, INC. AND CONTAINS CONFIDENTIAL AND TRADE SECRET INFORMATION. THIS SHEET MAY NOT BE TRANSFERED FROM THE CUSTODY OF THE COMPETENT DIVISION OF R&D DEPARTMENT EXCEPT AS AUTHORIZED BY COMPAL ELECTRONICS, INC. NEITHER THIS SHEET NOR THE INFORMATION IT CONTAINS MAY BE USED BY OR DISCLOSED TO ANY THIRD PARTY WITHOUT PRIOR WRITTEN CONSENT OF COMPAL ELECTRONICS, INC.

Compal Electronics, Inc.

Title: BLOCK DIAGRAMS

Size: Custom | Document Number: B5W1E_LA-D121P | Rev: 1.0

Date: Thursday, April 16, 2015 | Sheet 2 of 33

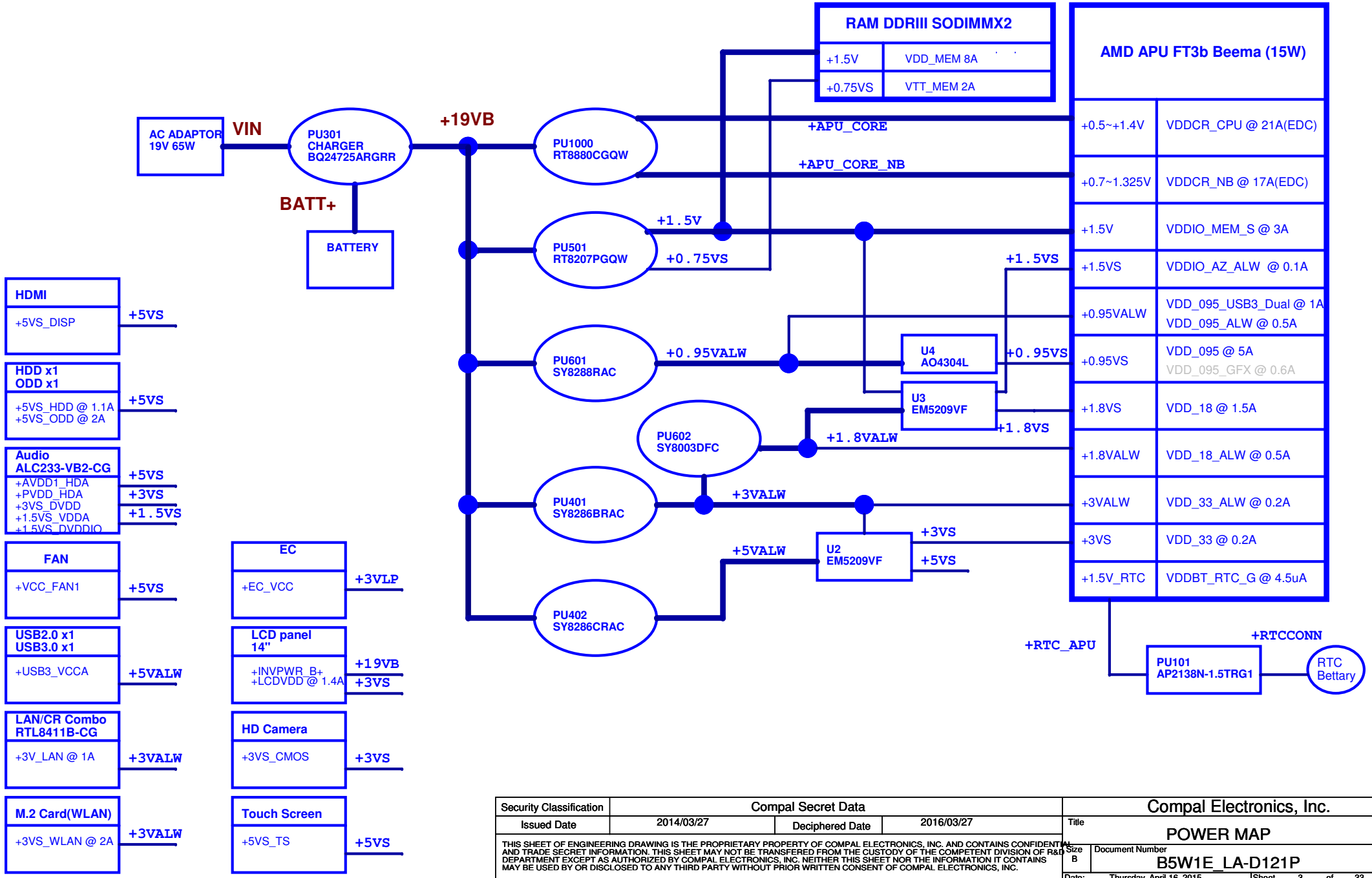

Security Classification	Compal Secret Data		
Issued Date	2014/03/27	Deciphered Date	2016/03/27

THIS SHEET OF ENGINEERING DRAWING IS THE PROPRIETARY PROPERTY OF COMPAL ELECTRONICS, INC. AND CONTAINS CONFIDENTIAL AND TRADE SECRET INFORMATION. THIS SHEET MAY NOT BE TRANSFERED FROM THE CUSTODY OF THE COMPETENT DIVISION OF R&D DEPARTMENT EXCEPT AS AUTHORIZED BY COMPAL ELECTRONICS, INC. NEITHER THIS SHEET NOR THE INFORMATION IT CONTAINS MAY BE USED BY OR DISCLOSED TO ANY THIRD PARTY WITHOUT PRIOR WRITTEN CONSENT OF COMPAL ELECTRONICS, INC.

Compal Electronics, Inc.

Title: POWER MAP

Size: B | Document Number: B5W1E_LA-D121P | Rev: 1.0

Date: Thursday, April 16, 2015 | Sheet 3 of 33

Voltage Rails

Power Plane	Description	S0	S3	S5
VIN	Adapter power supply (19V)	ON	ON	ON
B+	AC or battery power rail for power circuit.	ON	ON	ON
+APU_CORE	Core voltage for APU	ON	OFF	OFF
+APU_CORE_NB	Voltage for On-die VGA of APU	ON	OFF	OFF
+0.95VALW	0.95V always on power rail	ON	ON	ON
+0.95VS	0.95V switched power rail	ON	OFF	OFF
+1.8VALW	1.8V always on power rail	ON	ON	ON
+1.8VS	1.8V switched power rail	ON	OFF	OFF
+1.5V	1.5V power rail for APU and DDR	ON	ON	OFF
+1.5VS	1.5V switched power rail	ON	OFF	OFF
+0.75VS	0.75V switched power rail for DDR terminator	ON	OFF	OFF
+3VALW	3.3V always on power rail	ON	ON	ON
+3VS	3.3V switched power rail	ON	OFF	OFF
+5VALW	5V always on power rail	ON	ON	ON
+5VS	5V switched power rail	ON	OFF	OFF
+RTC_APU	RTC power	ON	ON	ON

SMBus List

EC SMBus Port1 (+3VALW)			EC SMBus Port2 (+3VS)		
Device	Address	HEX	Device	Address	HEX
Smart Battery	0001 011X b	16H	SB-TSI (APU)	1001 100X b	98H

APU SMBus Port0 (+3VS)			APU SMBus Port1(+3VALW)		
Device	Address	HEX	Device	Address	HEX
DDR DIMM1	1010 000Xb	A0H			
DDR DIMM2	1010 001Xb	A2H			

ZZZ
PCB
Part Number = DAZ1GS00100
PCB B5W1E LA-D121P LS-D121P

U44 9022@
EC
Part Number = SA000075S30
S IC KB9022QD LQFP 128P EC CONTROLLER

ZZZ
HDMI_ROYALTY
ROYALTY HDMI W/LOGO+HDCP
RO0000003HM
45@

Board ID / SKU ID Table for AD channel

Vcc	3.3V				
Ra	100K +/-1%				
Board ID	Rb	V min	V typ	V max	EC AD
0	0		0.000V	0.300V	0x00 - 0x0B
1	12K +/-1%	0.347V	0.354V	0.360V	0x0C - 0x1C
2	15K +/-1%	0.423V	0.430V	0.438V	0x1D - 0x26
3	20K +/-1%	0.541V	0.550V	0.559V	0x27 - 0x30
4	27K +/-1%	0.691V	0.702V	0.713V	0x31 - 0x3B
5	33K +/-1%	0.807V	0.819V	0.831V	0x3C - 0x46
6	43K +/-1%	0.978V	0.992V	1.006V	0x47 - 0x54
7	56K +/-1%	1.169V	1.185V	1.200V	0x55 - 0x64
8	75K +/-1%	1.398V	1.414V	1.430V	0x65 - 0x76
9	100K +/-1%	1.634V	1.650V	1.667V	0x77 - 0x87
10	130K +/-1%	1.849V	1.865V	1.881V	0x88 - 0x96
11	160K +/-1%	2.015V	2.031V	2.046V	0x97 - 0xA3
12	200K +/-1%	2.185V	2.200V	2.215V	0xA4 - 0xAD
13	240K +/-1%	2.316V	2.329V	2.343V	0xAE - 0xB7
14	270K +/-1%	2.395V	2.408V	2.421V	0xB8 - 0xC0
15	330K +/-1%	2.521V	2.533V	2.544V	0xC1 - 0xC9
16	430K +/-1%	2.667V	2.677V	2.687V	0xCA - 0xD3
17	560K +/-1%	2.791V	2.800V	2.808V	0xD4 - 0xDC
18	750K +/-1%	2.905V	2.912V	2.919V	0xDD - 0xE6
19	NC	3.000V	3.300V		0xE7 - 0xFF

BOARD ID Table

Board ID	PCB Revision
12	EVT
13	DVT
14*	PVT
15	Pre-MP
16	
17	
18	
19	

BOM Structure Table

BOM Structure	BTO Item
@	Unpop
CONN@	Connector part control by ME
KBN@	Stuff when use Kabini APU
BMA@	Stuff when use Beema APU
CZL@	Stuff when use CZ-L APU
233@	Use for Audio Codec ALC233-VB2
255@	Use for Audio Codec ALC255
283@	Use for Audio Codec ALC283
EMC@	EMI pop component
@EMC@	EMI unpop component
SP@	Short pad for clear CMOS
HDT@	HDT+ for test phase, MP remove
RS@	R-short
45@	HDMI royalty
9012@	Use KBC9012
9022@	Use KBC9022
BL@	Keyboard backlight
TPM@	Use discrete TPM module
ECI2C@	Use EC I2C T/P
TPUSB@	Use USB to I2C IC for T/P
BYOC@	Stuff when support BYOC
NBYOC@	Stuff when non-support BYOC
JP@	Jump
TP@	Test point

STATE \ SIGNAL	SLP_S3#	SLP_S5#	+VALW	+V	+VS	Clock
Full ON	HIGH	HIGH	ON	ON	ON	ON
S1(Power On Suspend)	HIGH	HIGH	ON	ON	ON	LOW
S3 (Suspend to RAM)	LOW	HIGH	ON	ON	OFF	OFF
S4 (Suspend to Disk)	LOW	HIGH	ON	OFF	OFF	OFF
S5 (Soft OFF)	LOW	LOW	ON	OFF	OFF	OFF

APU POWER SEQUENCE

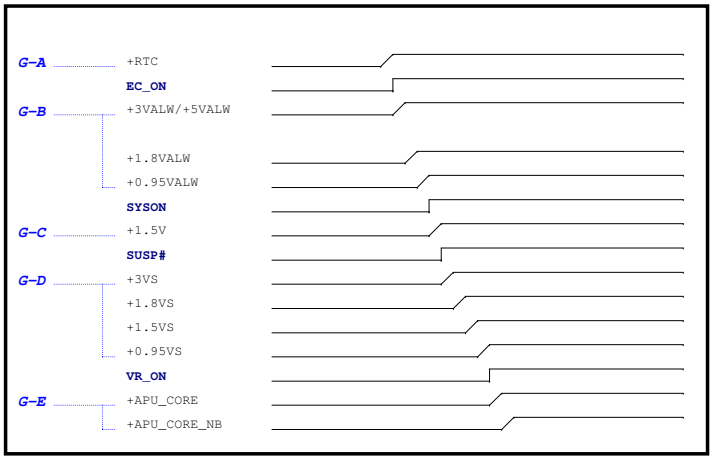

re check

Security Classification	Compal Secret Data		
Issued Date	2014/03/27	Deciphered Date	2016/03/27

THIS SHEET OF ENGINEERING DRAWING IS THE PROPRIETARY PROPERTY OF COMPAL ELECTRONICS, INC. AND CONTAINS CONFIDENTIAL AND TRADE SECRET INFORMATION. THIS SHEET MAY NOT BE TRANSFERED FROM THE CUSTODY OF THE COMPETENT DIVISION OF R&D DEPARTMENT EXCEPT AS AUTHORIZED BY COMPAL ELECTRONICS, INC. NEITHER THIS SHEET NOR THE INFORMATION IT CONTAINS MAY BE USED BY OR DISCLOSED TO ANY THIRD PARTY WITHOUT PRIOR WRITTEN CONSENT OF COMPAL ELECTRONICS, INC.

Compal Electronics, Inc.

Title: NOTES LIST

Size: B | Document Number: B5W1E_LA-D121P | Rev: 1.0

Date: Tuesday, April 21, 2015 | Sheet 4 of 33

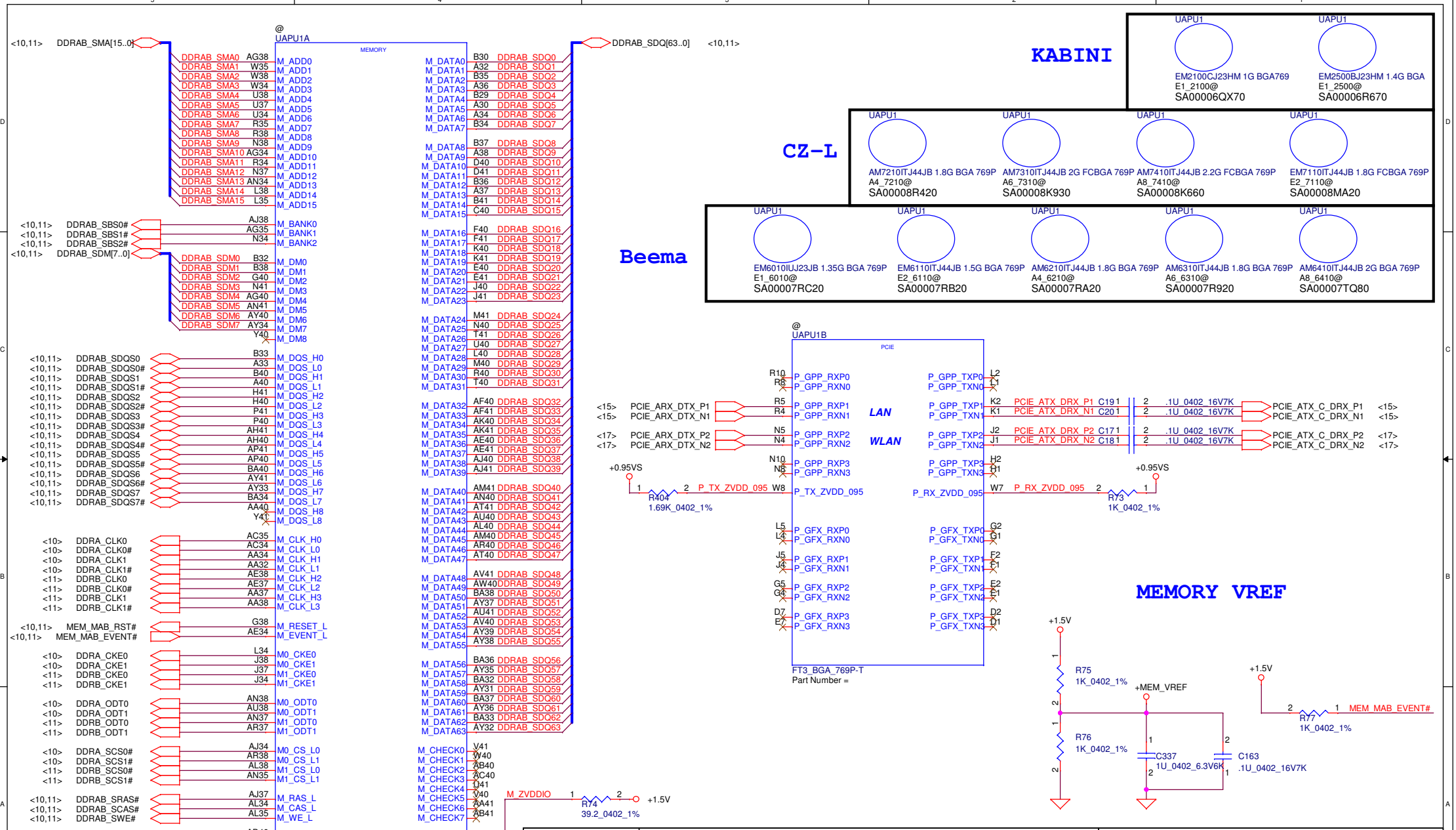

Security Classification	Compal Secret Data		
Issued Date	2014/03/27	Deciphered Date	2016/03/27

THIS SHEET OF ENGINEERING DRAWING IS THE PROPRIETARY PROPERTY OF COMPAL ELECTRONICS, INC. AND CONTAINS CONFIDENTIAL AND TRADE SECRET INFORMATION. THIS SHEET MAY NOT BE TRANSFERED FROM THE CUSTODY OF THE COMPETENT DIVISION OF R&D DEPARTMENT EXCEPT AS AUTHORIZED BY COMPAL ELECTRONICS, INC. NEITHER THIS SHEET NOR THE INFORMATION IT CONTAINS MAY BE USED BY OR DISCLOSED TO ANY THIRD PARTY WITHOUT PRIOR WRITTEN CONSENT OF COMPAL ELECTRONICS, INC.

Compal Electronics, Inc.

Title: P05-FT3 MEMORY INTERFACE/PCIE

Size: B | Document Number: B5W1E_LA-D121P | Rev: 1.0

Date: Thursday, April 16, 2015 | Sheet 5 of 33

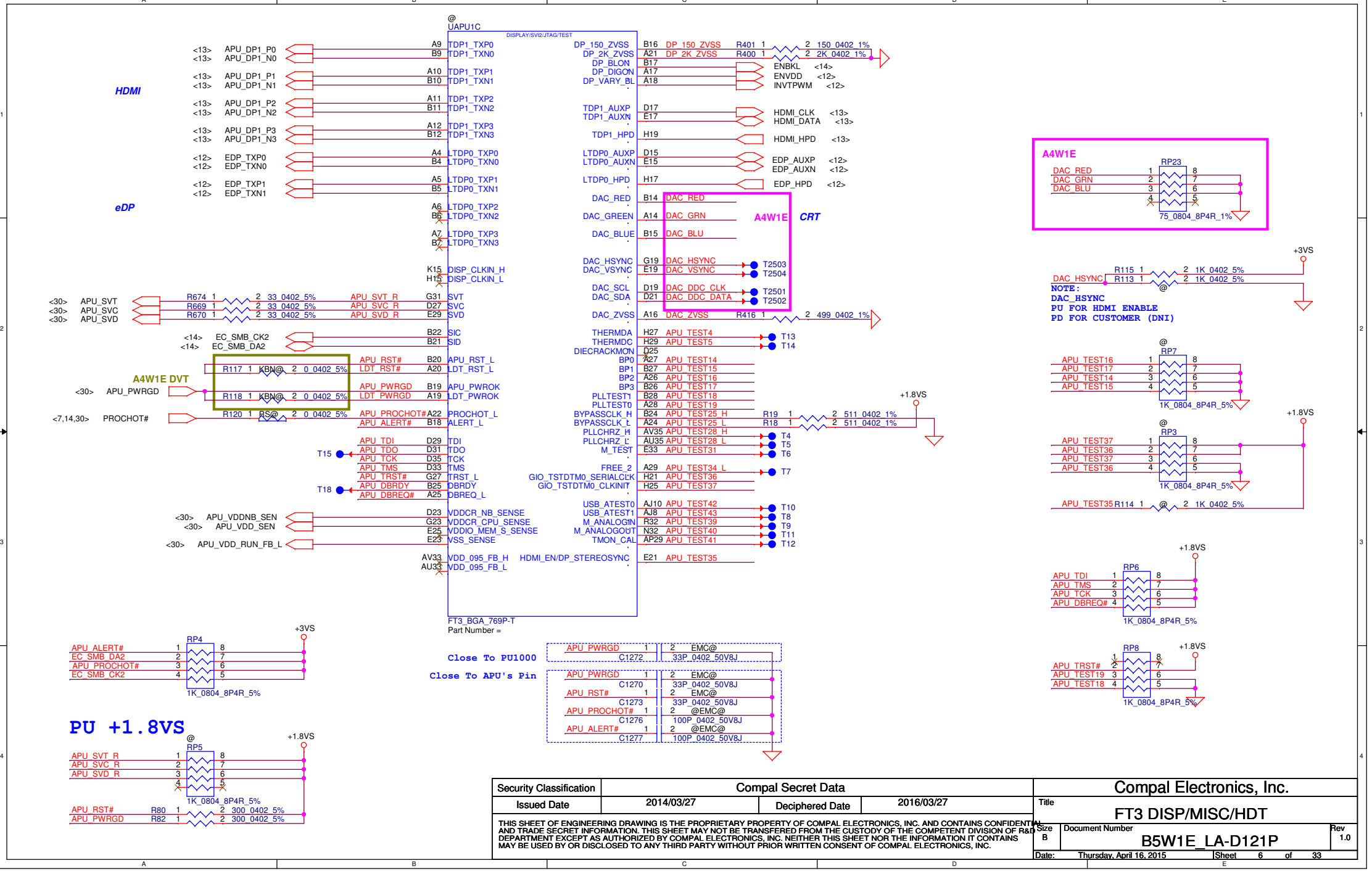

Security Classification	Compal Secret Data			Compal Electronics, Inc.
Issued Date	2014/03/27	Deciphered Date	2016/03/27	Title: FT3 DISP/MISC/HDT
				Size: B; Document Number: B5W1E_LA-D121P; Rev: 1.0
				Date: Thursday, April 16, 2015; Sheet 6 of 33

THIS SHEET OF ENGINEERING DRAWING IS THE PROPRIETARY PROPERTY OF COMPAL ELECTRONICS, INC. AND CONTAINS CONFIDENTIAL AND TRADE SECRET INFORMATION. THIS SHEET MAY NOT BE TRANSFERED FROM THE CUSTODY OF THE COMPETENT DIVISION OF R&D DEPARTMENT EXCEPT AS AUTHORIZED BY COMPAL ELECTRONICS, INC. NEITHER THIS SHEET NOR THE INFORMATION IT CONTAINS MAY BE USED BY OR DISCLOSED TO ANY THIRD PARTY WITHOUT PRIOR WRITTEN CONSENT OF COMPAL ELECTRONICS, INC.

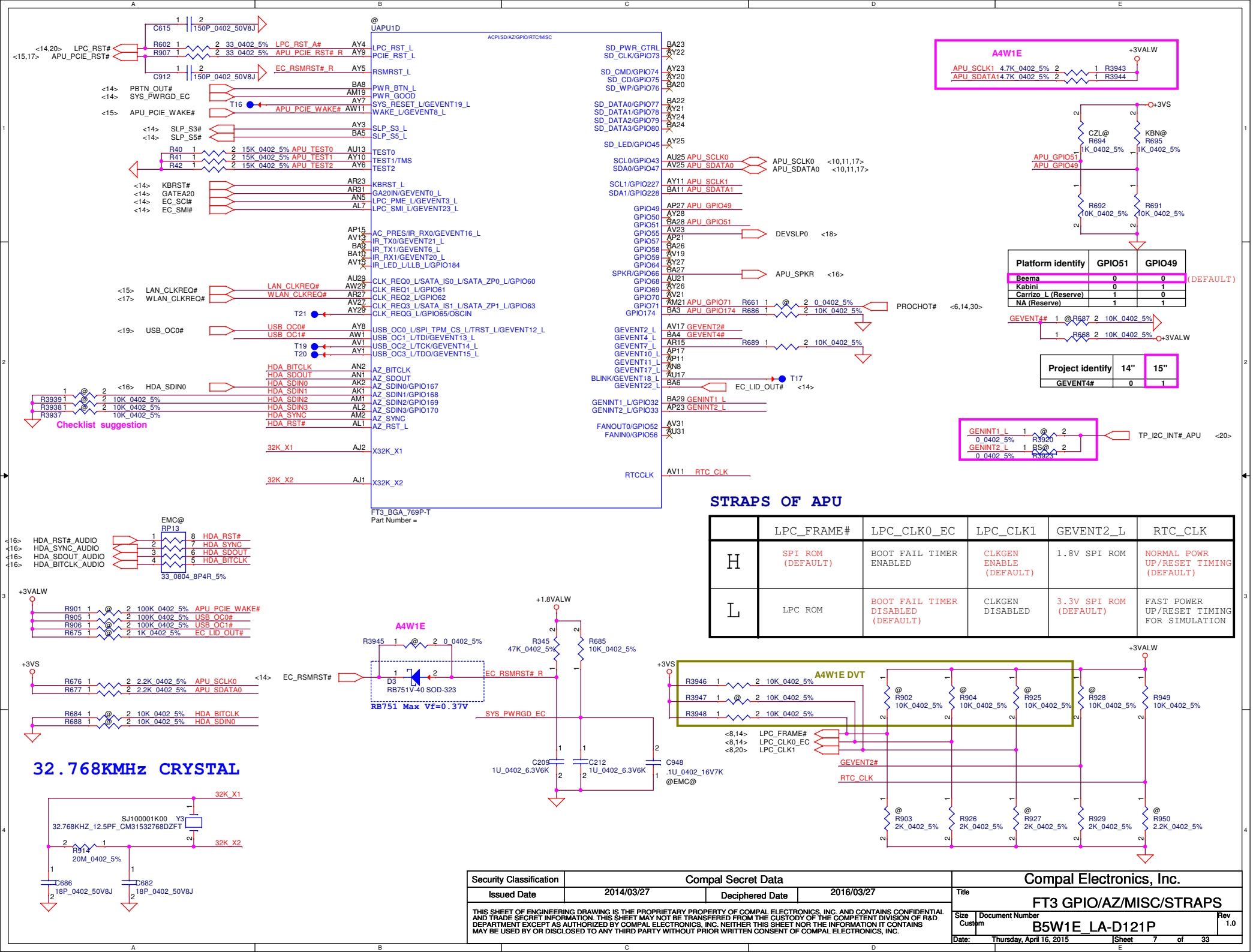

STRAPS OF APU

	LPC_FRAME#	LPC_CLK0_EC	LPC_CLK1	GEVENT2_L	RTC_CLK
H	SPI ROM (DEFAULT)	BOOT FAIL TIMER ENABLED	CLKGEN ENABLE (DEFAULT)	1.8V SPI ROM	NORMAL POWR UP/RESET TIMING (DEFAULT)
L	LPC ROM	BOOT FAIL TIMER DISABLED (DEFAULT)	CLKGEN DISABLED	3.3V SPI ROM (DEFAULT)	FAST POWER UP/RESET TIMING FOR SIMULATION

THIS SHEET OF ENGINEERING DRAWING IS THE PROPRIETARY PROPERTY OF COMPAL ELECTRONICS, INC. AND CONTAINS CONFIDENTIAL AND TRADE SECRET INFORMATION. THIS SHEET MAY NOT BE TRANSFERED FROM THE CUSTODY OF THE COMPETENT DIVISION OF R&D DEPARTMENT EXCEPT AS AUTHORIZED BY COMPAL ELECTRONICS, INC. NEITHER THIS SHEET NOR THE INFORMATION IT CONTAINS MAY BE USED BY OR DISCLOSED TO ANY THIRD PARTY WITHOUT PRIOR WRITTEN CONSENT OF COMPAL ELECTRONICS, INC.

Security Classification	Compal Secret Data		
Issued Date	2014/03/27	Deciphered Date	2016/03/27

Compal Electronics, Inc.

Title: FT3 GPIO/AZ/MISC/STRAPS

Size: Custom | Document Number: B5W1E_LA-D121P | Rev: 1.0

Date: Thursday, April 16, 2015 | Sheet 7 of 33

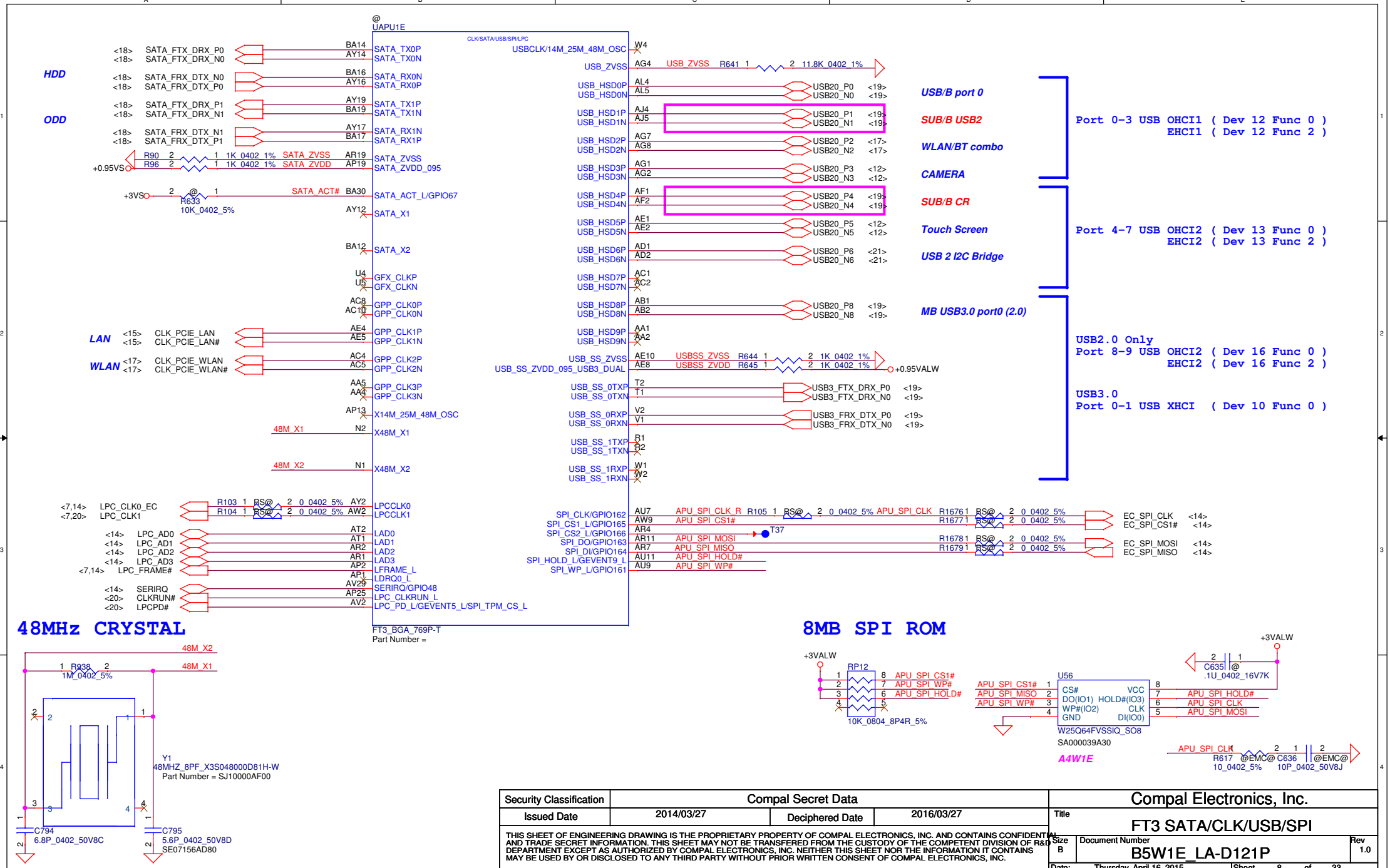

Security Classification	Compal Secret Data		
Issued Date	2014/03/27	Deciphered Date	2016/03/27

THIS SHEET OF ENGINEERING DRAWING IS THE PROPRIETARY PROPERTY OF COMPAL ELECTRONICS, INC. AND CONTAINS CONFIDENTIAL AND TRADE SECRET INFORMATION. THIS SHEET MAY NOT BE TRANSFERED FROM THE CUSTODY OF THE COMPETENT DIVISION OF R&D DEPARTMENT EXCEPT AS AUTHORIZED BY COMPAL ELECTRONICS, INC. NEITHER THIS SHEET NOR THE INFORMATION IT CONTAINS MAY BE USED BY OR DISCLOSED TO ANY THIRD PARTY WITHOUT PRIOR WRITTEN CONSENT OF COMPAL ELECTRONICS, INC.

Compal Electronics, Inc.

Title: FT3 SATA/CLK/USB/SPI

Size: B | Document Number: B5W1E_LA-D121P | Rev: 1.0

Date: Thursday, April 16, 2015 | Sheet 8 of 33

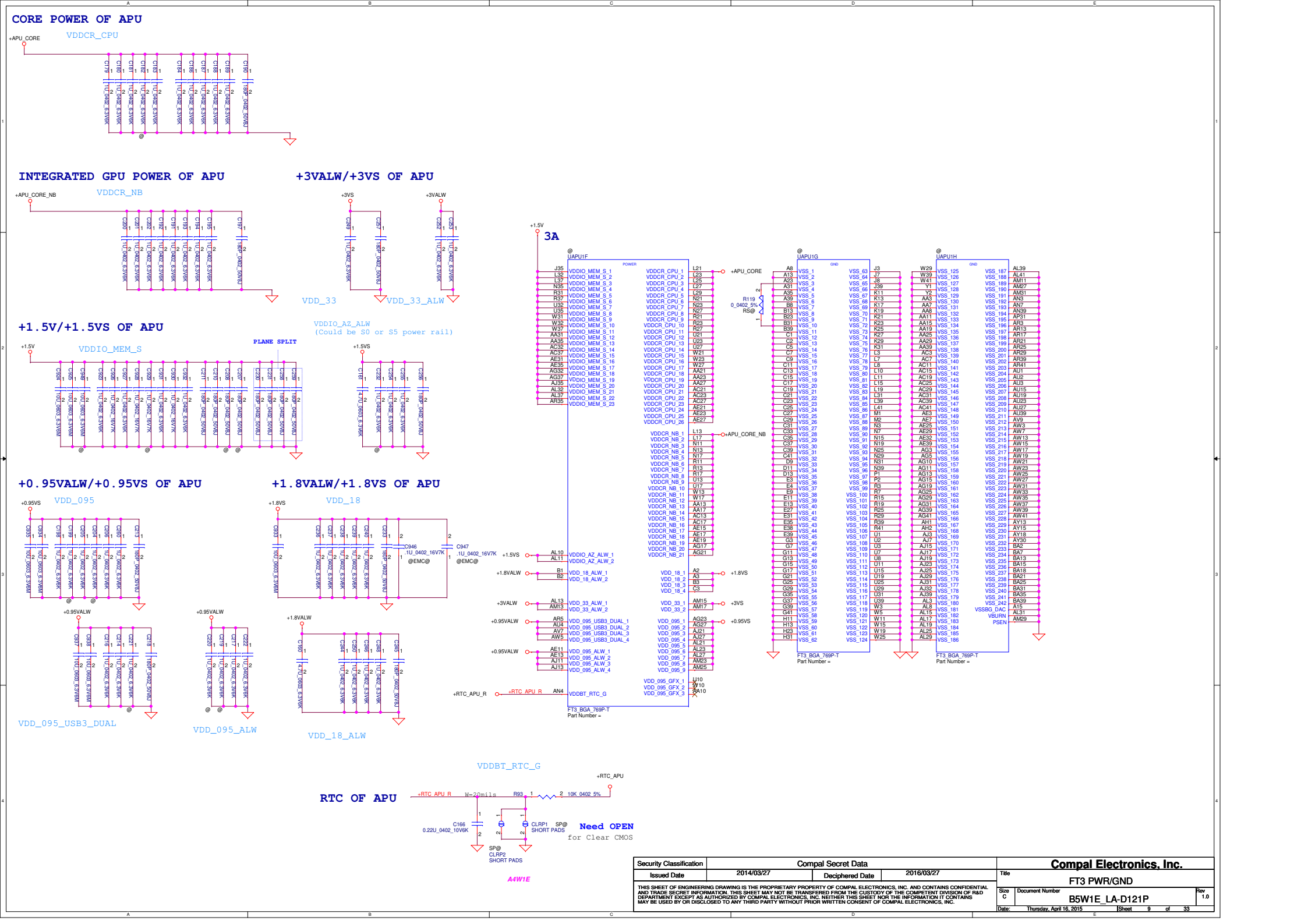

Security Classification	Compal Secret Data		
Issued Date	2014/03/27	Deciphered Date	2016/03/27

THIS SHEET OF ENGINEERING DRAWING IS THE PROPRIETARY PROPERTY OF COMPAL ELECTRONICS, INC. AND CONTAINS CONFIDENTIAL AND TRADE SECRET INFORMATION. THIS SHEET MAY NOT BE TRANSFERED FROM THE CUSTODY OF THE COMPETENT DIVISION OF R&D DEPARTMENT EXCEPT AS AUTHORIZED BY COMPAL ELECTRONICS, INC. NEITHER THIS SHEET NOR THE INFORMATION IT CONTAINS MAY BE USED BY OR DISCLOSED TO ANY THIRD PARTY WITHOUT PRIOR WRITTEN CONSENT OF COMPAL ELECTRONICS, INC.

Compal Electronics, Inc.

Title: FT3 PWR/GND

Size	Document Number	Rev
C	B5W1E_LA-D121P	1.0

Date: Thursday, April 16, 2015 | Sheet 9 of 33

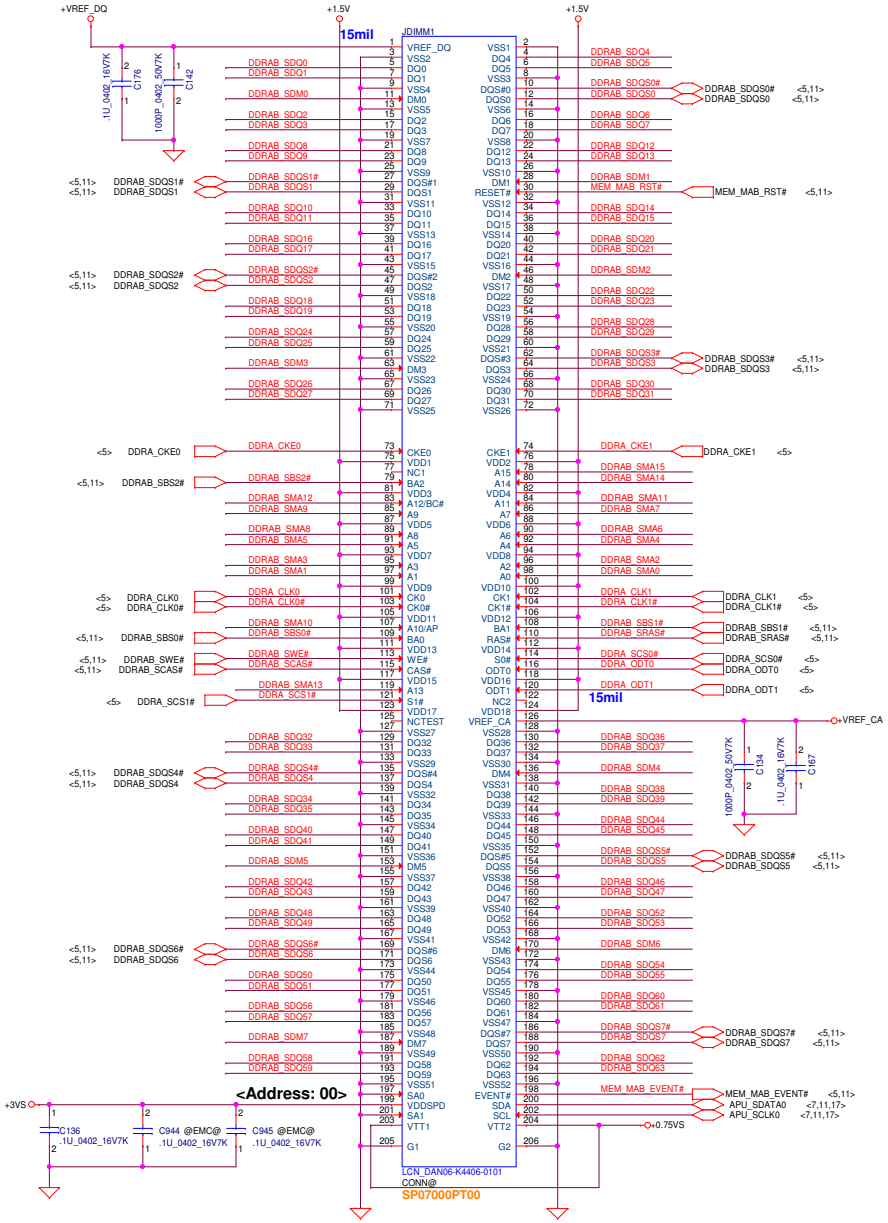

+1.5V/+0.75VS OF DIMM1

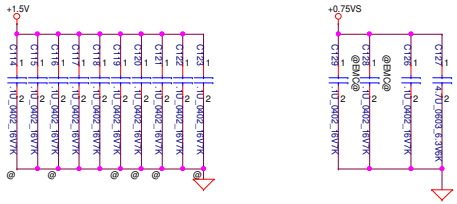

VREF for DIMM1,2

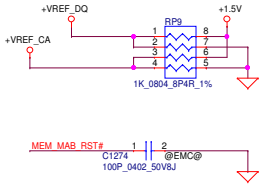

Security Classification	Compal Secret Data		
Issued Date	2014/03/27	Deciphered Date	2016/03/27

THIS SHEET OF ENGINEERING DRAWING IS THE PROPRIETARY PROPERTY OF COMPAL ELECTRONICS, INC. AND CONTAINS CONFIDENTIAL AND TRADE SECRET INFORMATION. THIS SHEET MAY NOT BE TRANSFERED FROM THE CUSTODY OF THE COMPETENT DIVISION OF R&D DEPARTMENT EXCEPT AS AUTHORIZED BY COMPAL ELECTRONICS, INC. NEITHER THIS SHEET NOR THE INFORMATION IT CONTAINS MAY BE USED BY OR DISCLOSED TO ANY THIRD PARTY WITHOUT PRIOR WRITTEN CONSENT OF COMPAL ELECTRONICS, INC.

Compal Electronics, Inc.

Title: DDR3 SODIMM-I Socket

Size	Document Number	Rev
C	B5W1E_LA-D121P	1.0

Date: Thursday, April 16, 2015 Sheet 10 of 33

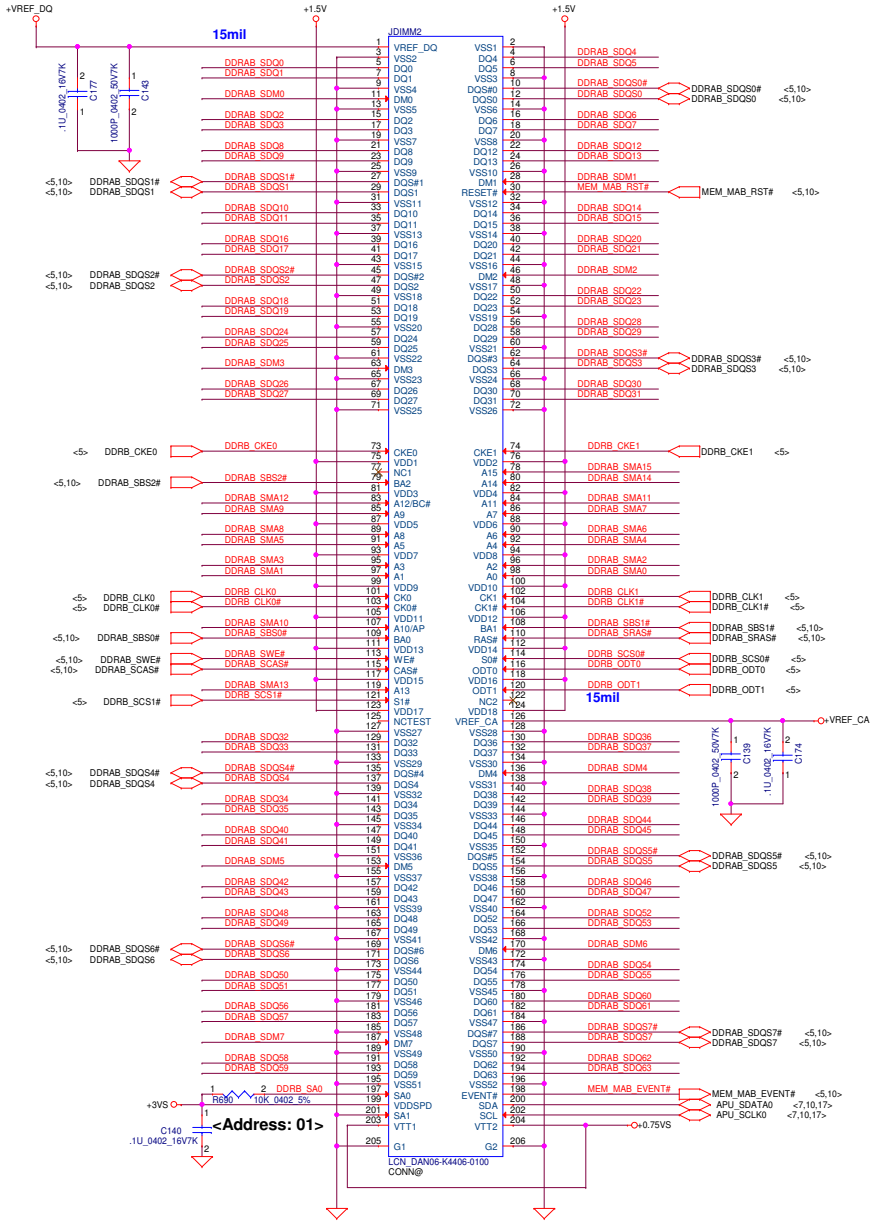

DIMM_B H:4mm STD

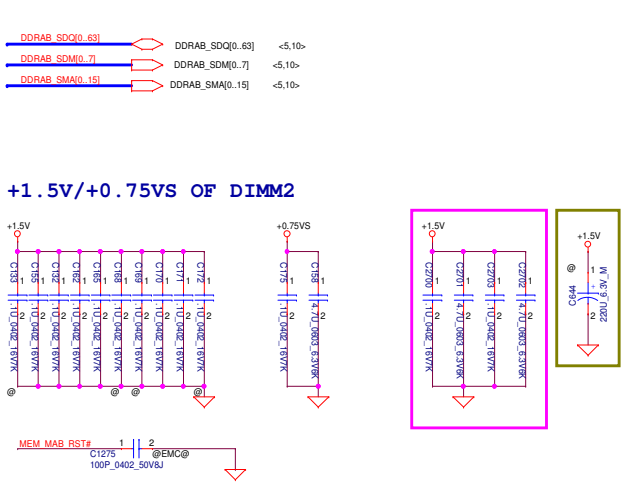

Security Classification	Compal Secret Data		
Issued Date	2014/03/27	Deciphered Date	2016/03/27

THIS SHEET OF ENGINEERING DRAWING IS THE PROPRIETARY PROPERTY OF COMPAL ELECTRONICS, INC. AND CONTAINS CONFIDENTIAL AND TRADE SECRET INFORMATION. THIS SHEET MAY NOT BE TRANSFERED FROM THE CUSTODY OF THE COMPETENT DIVISION OF R&D DEPARTMENT EXCEPT AS AUTHORIZED BY COMPAL ELECTRONICS, INC. NEITHER THIS SHEET NOR THE INFORMATION IT CONTAINS MAY BE USED BY OR DISCLOSED TO ANY THIRD PARTY WITHOUT PRIOR WRITTEN CONSENT OF COMPAL ELECTRONICS, INC.

Compal Electronics, Inc.

Title: DDR3 SODIMM-II Socket

Size: C | Document Number: B5W1E_LA-D121P | Rev: 1.0

Date: Thursday, April 16, 2015 | Sheet 11 of 33

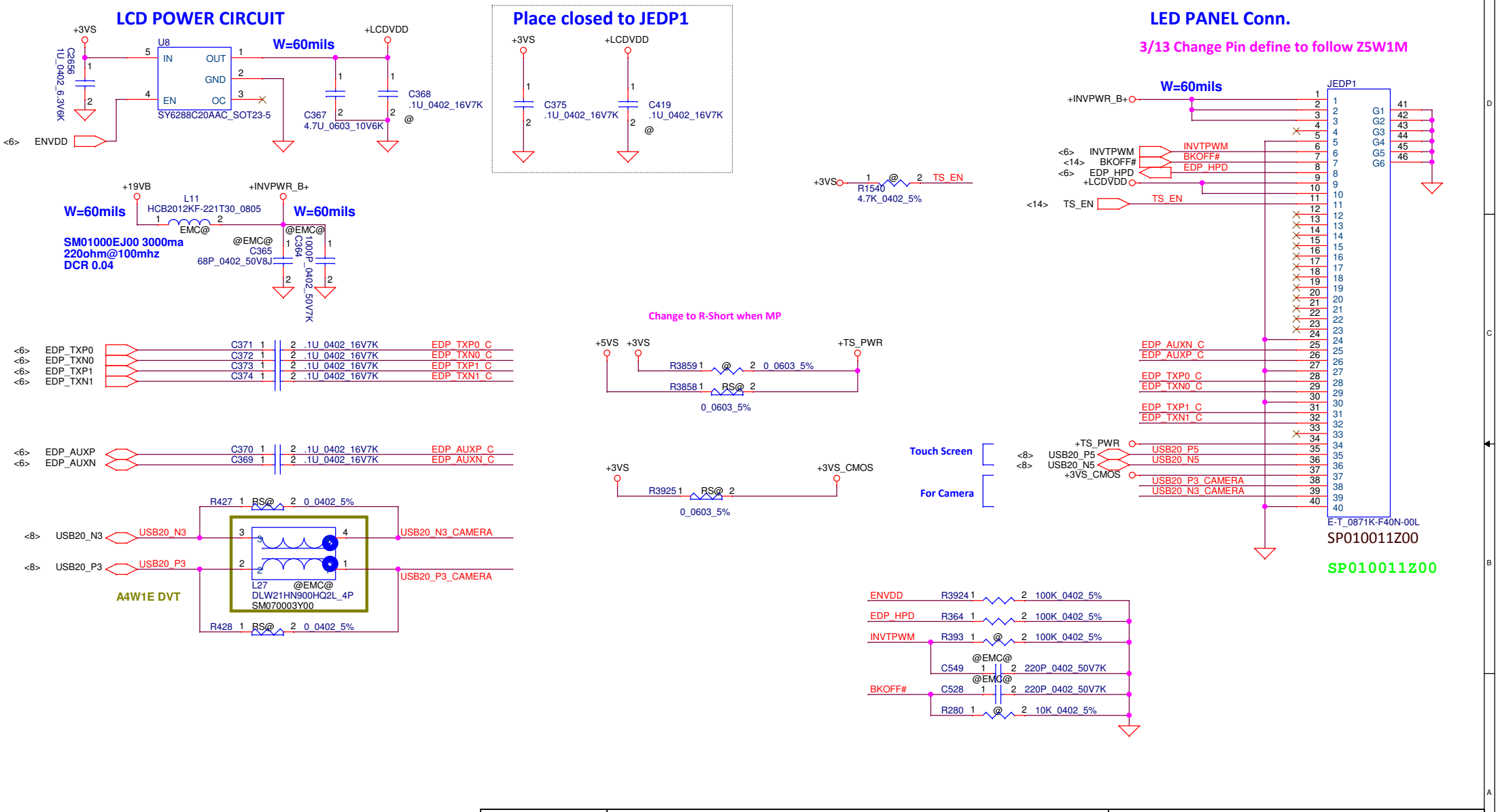

Security Classification	Compal Secret Data		
Issued Date	2014/11/04	Deciphered Date	2016/11/04

THIS SHEET OF ENGINEERING DRAWING IS THE PROPRIETARY PROPERTY OF COMPAL ELECTRONICS, INC. AND CONTAINS CONFIDENTIAL AND TRADE SECRET INFORMATION. THIS SHEET MAY NOT BE TRANSFERED FROM THE CUSTODY OF THE COMPETENT DIVISION OF R&D DEPARTMENT EXCEPT AS AUTHORIZED BY COMPAL ELECTRONICS, INC. NEITHER THIS SHEET NOR THE INFORMATION IT CONTAINS MAY BE USED BY OR DISCLOSED TO ANY THIRD PARTY WITHOUT PRIOR WRITTEN CONSENT OF COMPAL ELECTRONICS, INC.

Compal Electronics, Inc.

Title: eDP/Camera/Touch Screen

Size: Custom | Document Number: B5W1E_LA-D121P | Rev: 1.0

Date: Thursday, April 16, 2015 | Sheet 12 of 33

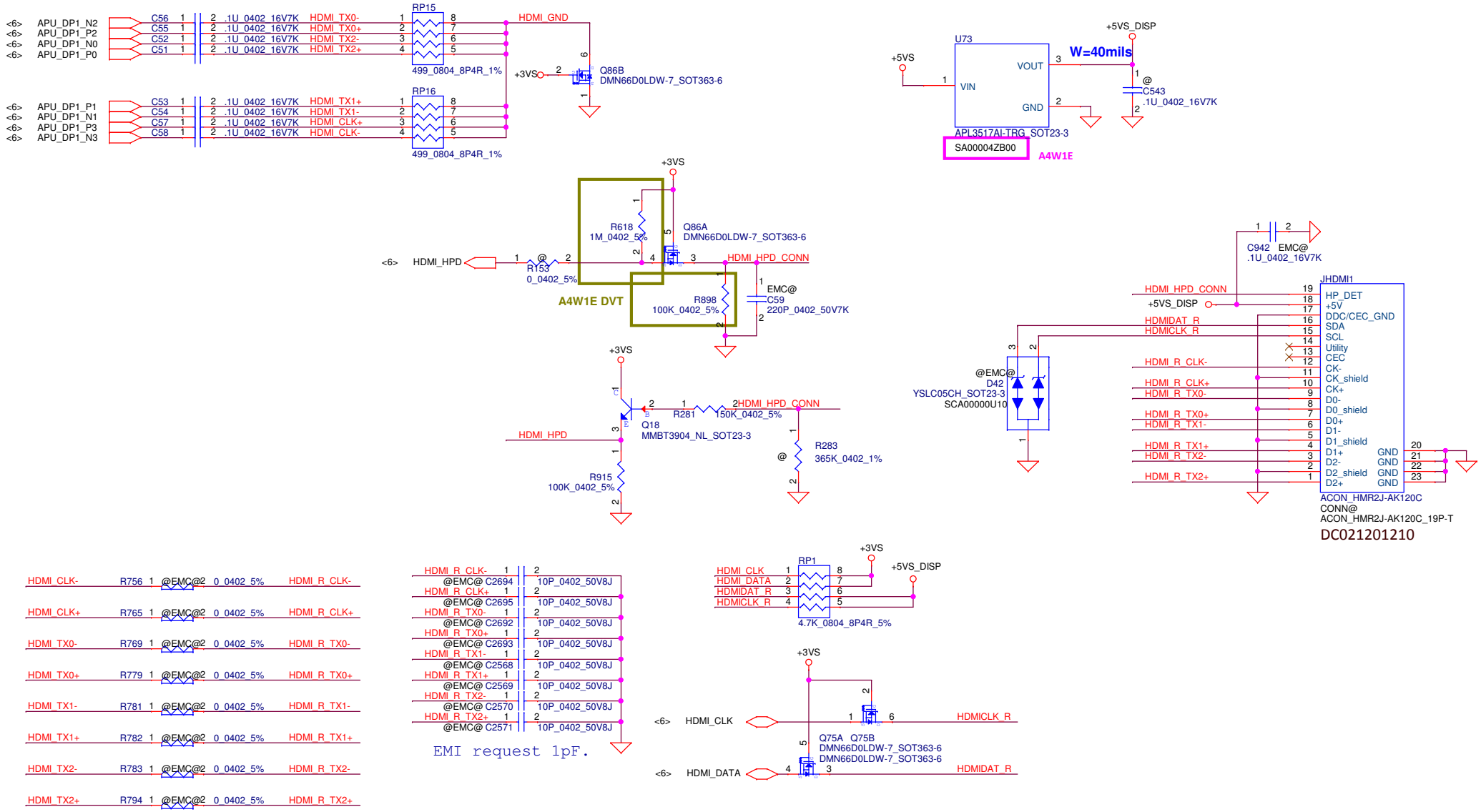

Security Classification	Compal Secret Data		
Issued Date	2014/03/27	Deciphered Date	2016/03/27

THIS SHEET OF ENGINEERING DRAWING IS THE PROPRIETARY PROPERTY OF COMPAL ELECTRONICS, INC. AND CONTAINS CONFIDENTIAL AND TRADE SECRET INFORMATION. THIS SHEET MAY NOT BE TRANSFERED FROM THE CUSTODY OF THE COMPETENT DIVISION OF R&D DEPARTMENT EXCEPT AS AUTHORIZED BY COMPAL ELECTRONICS, INC. NEITHER THIS SHEET NOR THE INFORMATION IT CONTAINS MAY BE USED BY OR DISCLOSED TO ANY THIRD PARTY WITHOUT PRIOR WRITTEN CONSENT OF COMPAL ELECTRONICS, INC.

Compal Electronics, Inc.

Title: HDMI CONN

Size: B | Document Number: B5W1E_LA-D121P | Rev: 1.0

Date: Thursday, April 16, 2015 | Sheet 13 of 33

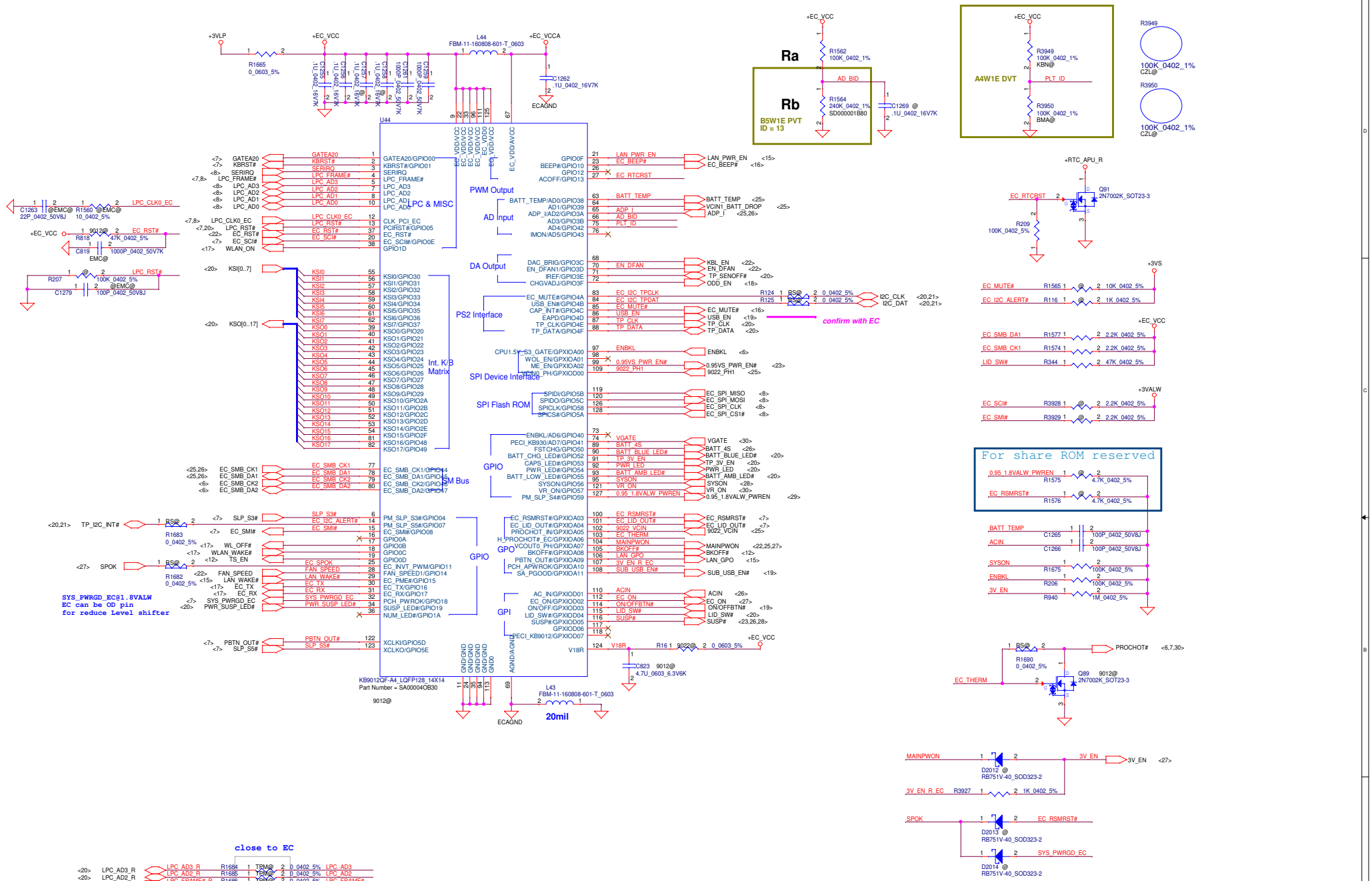

Security Classification	Compal Secret Data		
Issued Date	2014/03/27	Deciphered Date	2016/03/27

THIS SHEET OF ENGINEERING DRAWING IS THE PROPRIETARY PROPERTY OF COMPAL ELECTRONICS, INC. AND CONTAINS CONFIDENTIAL AND TRADE SECRET INFORMATION. THIS SHEET MAY NOT BE TRANSFERED FROM THE CUSTODY OF THE COMPETENT DIVISION OF R&D DEPARTMENT EXCEPT AS AUTHORIZED BY COMPAL ELECTRONICS, INC. NEITHER THIS SHEET NOR THE INFORMATION IT CONTAINS MAY BE USED BY OR DISCLOSED TO ANY THIRD PARTY WITHOUT PRIOR WRITTEN CONSENT OF COMPAL ELECTRONICS, INC.

Compal Electronics, Inc.

Title: EC ENE-KB9022

Size: C | Document Number: B5W1E_LA-D121P | Rev: 1.0

Date: Thursday, April 16, 2015 | Sheet 14 of 33

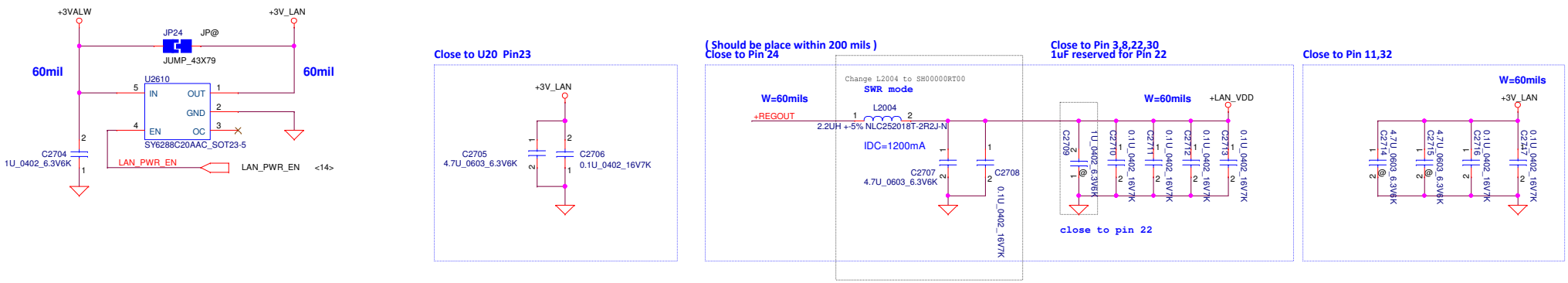

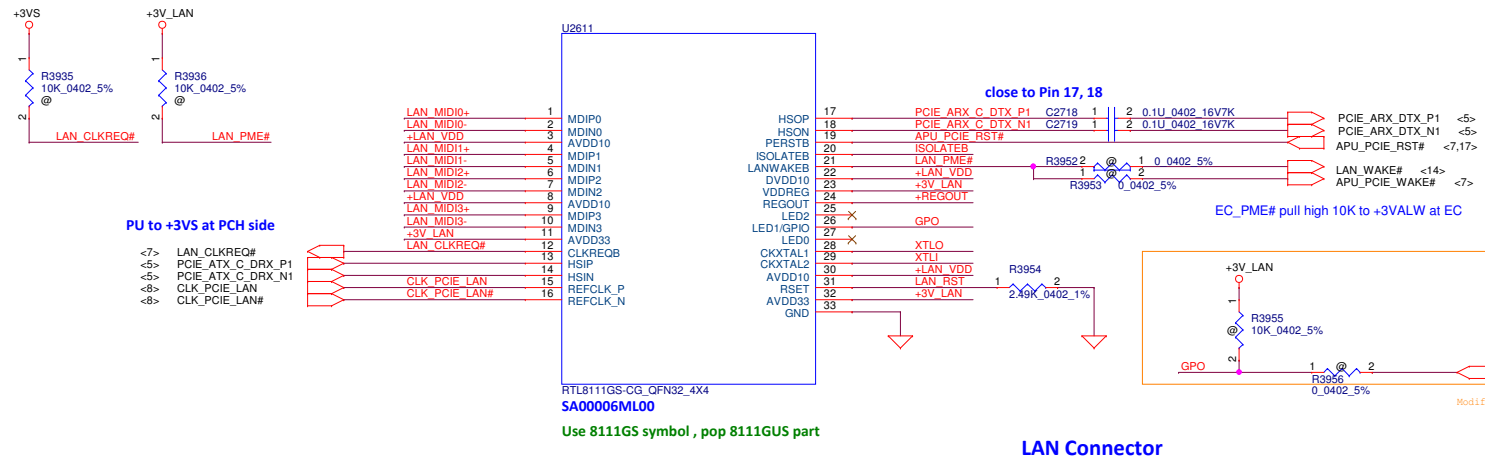

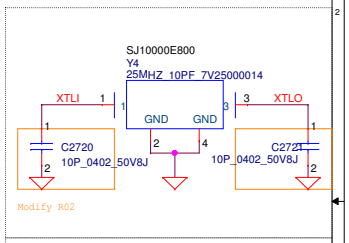

Consider VCC33 may be connected to Main Power or chipset/bios's GPO, the pull-low resistor R14 can be NC only when Main Power or chipset/bios's GPO can ensure to drive the ISOLATEB pin to a voltage level < 0.8V at the system state S3~S5.

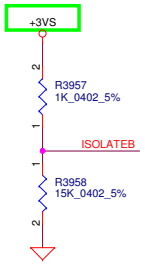

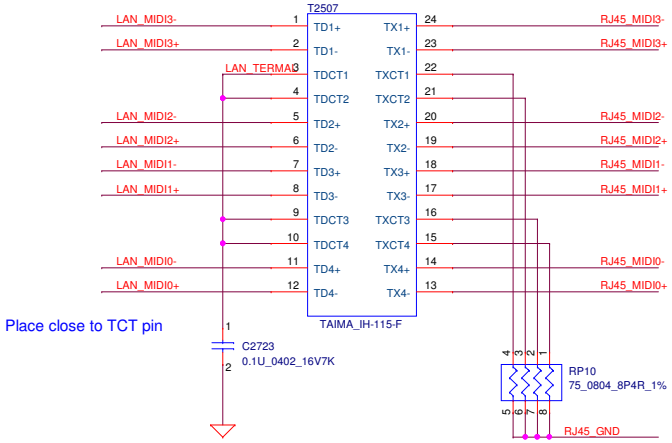

LAN Connector

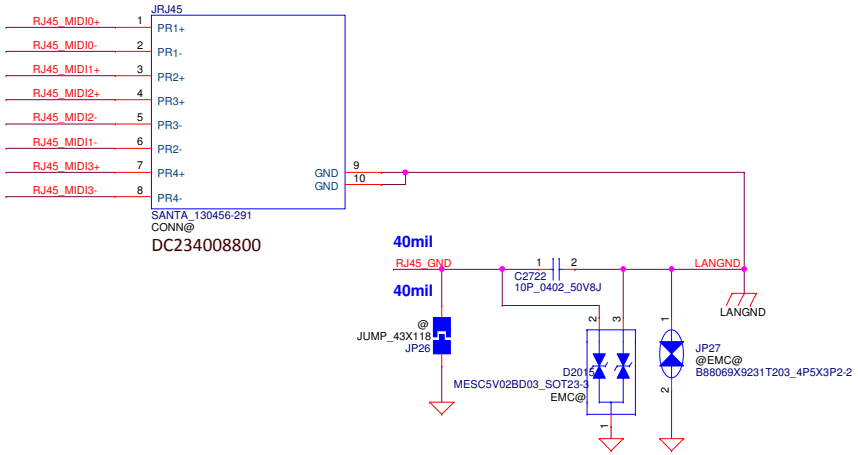

Security Classification	Compal Secret Data			Compal Electronics, Inc.
Issued Date	2013/10/28	Deciphered Date	2014/10/28	Title: LAN_RTL8111GUS-CG
THIS SHEET OF ENGINEERING DRAWING IS THE PROPRIETARY PROPERTY OF COMPAL ELECTRONICS, INC. AND CONTAINS CONFIDENTIAL AND TRADE SECRET INFORMATION. THIS SHEET MAY NOT BE TRANSFERED FROM THE CUSTODY OF THE COMPETENT DIVISION OF R&D DEPARTMENT EXCEPT AS AUTHORIZED BY COMPAL ELECTRONICS, INC. NEITHER THIS SHEET NOR THE INFORMATION IT CONTAINS MAY BE USED BY OR DISCLOSED TO ANY THIRD PARTY WITHOUT PRIOR WRITTEN CONSENT OF COMPAL ELECTRONICS, INC.				Size: Custom; Document Number: B5W1E_LA-D121P; Rev: 1.0
				Date: Thursday, April 16, 2015; Sheet 15 of 33

HD Audio Codec

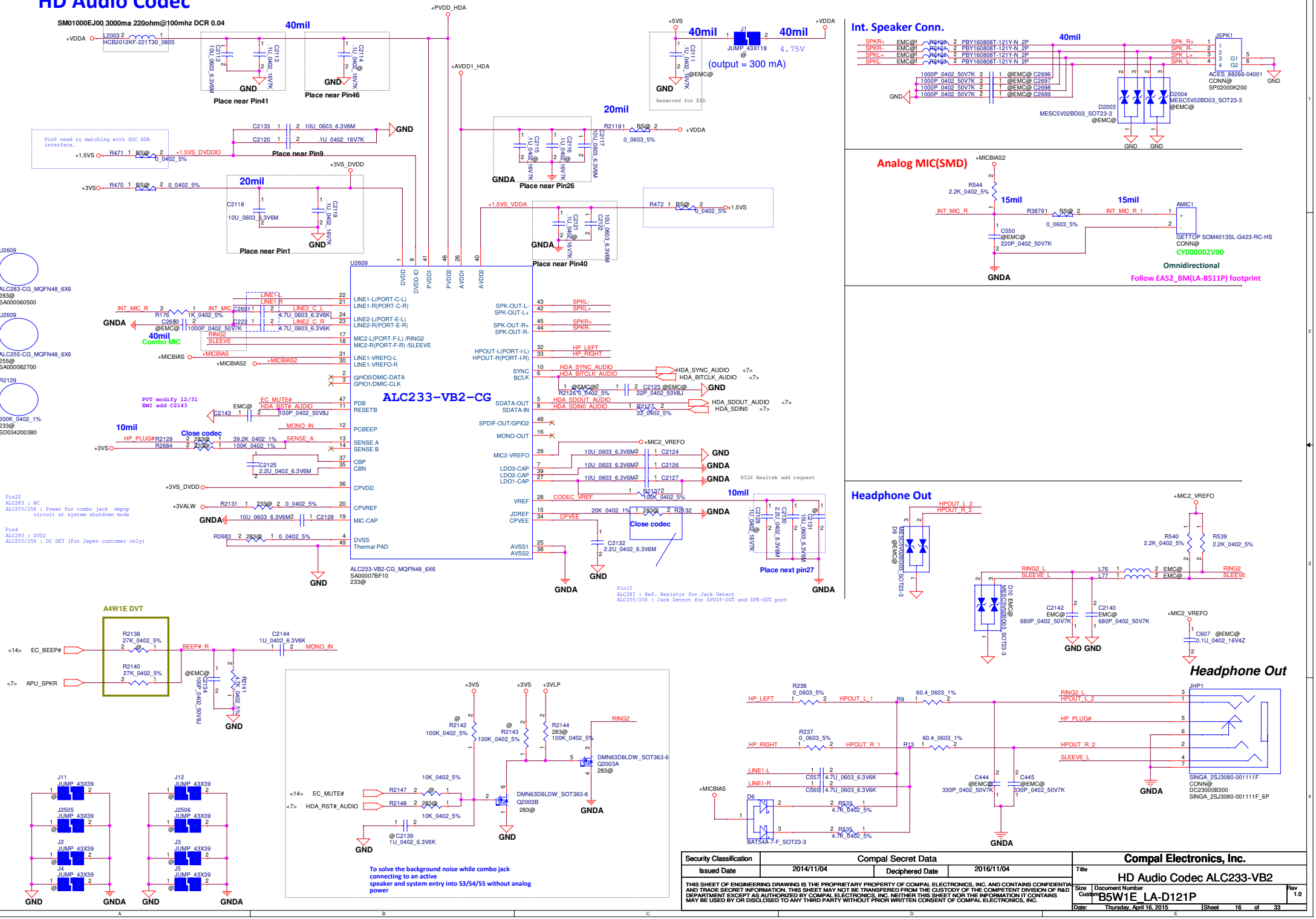

Security Classification	Compal Secret Data		
Issued Date	2014/11/04	Deciphered Date	2016/11/04

THIS SHEET OF ENGINEERING DRAWING IS THE PROPRIETARY PROPERTY OF COMPAL ELECTRONICS, INC. AND CONTAINS CONFIDENTIAL AND TRADE SECRET INFORMATION. THIS SHEET MAY NOT BE TRANSFERED FROM THE CUSTODY OF THE COMPETENT DIVISION OF R&D DEPARTMENT EXCEPT AS AUTHORIZED BY COMPAL ELECTRONICS, INC. NEITHER THIS SHEET NOR THE INFORMATION IT CONTAINS MAY BE USED BY OR DISCLOSED TO ANY THIRD PARTY WITHOUT PRIOR WRITTEN CONSENT OF COMPAL ELECTRONICS, INC.

Compal Electronics, Inc.

Title: HD Audio Codec ALC233-VB2

Size: Customer | Document Number: B5W1E_LA-D121P | Rev: 1.0

Date: Thursday, April 16, 2015 | Sheet 16 of 33

Wireless LAN

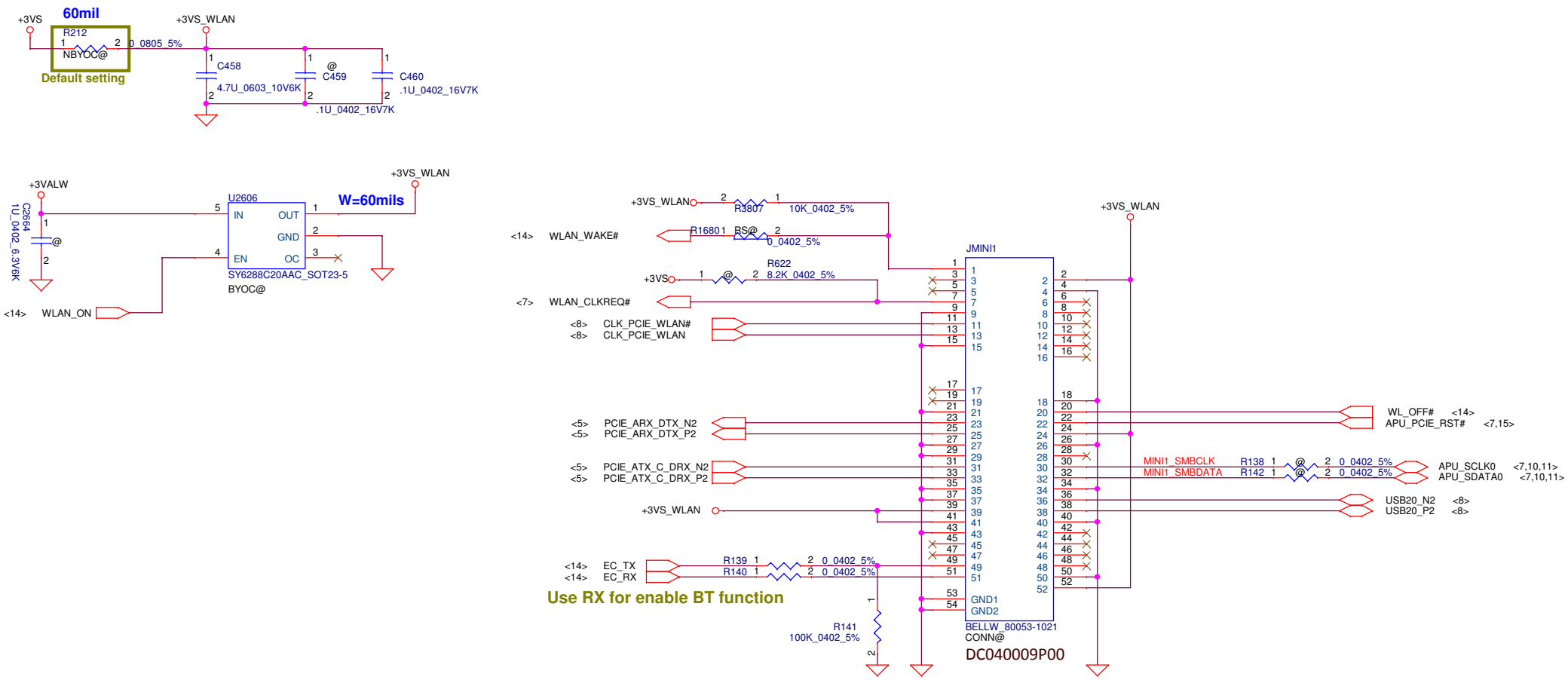

Security Classification	Compal Secret Data			Compal Electronics, Inc.
Issued Date	2014/11/04	Deciphered Date	2016/11/04	Title: M.2 Key E (WLAN)
THIS SHEET OF ENGINEERING DRAWING IS THE PROPRIETARY PROPERTY OF COMPAL ELECTRONICS, INC. AND CONTAINS CONFIDENTIAL AND TRADE SECRET INFORMATION. THIS SHEET MAY NOT BE TRANSFERED FROM THE CUSTODY OF THE COMPETENT DIVISION OF R&D DEPARTMENT EXCEPT AS AUTHORIZED BY COMPAL ELECTRONICS, INC. NEITHER THIS SHEET NOR THE INFORMATION IT CONTAINS MAY BE USED BY OR DISCLOSED TO ANY THIRD PARTY WITHOUT PRIOR WRITTEN CONSENT OF COMPAL ELECTRONICS, INC.				Size: B / Document Number: B5W1E_LA-D121P / Rev: 1.0
				Date: Thursday, April 16, 2015 / Sheet 17 of 33

SATA HDD Conn.

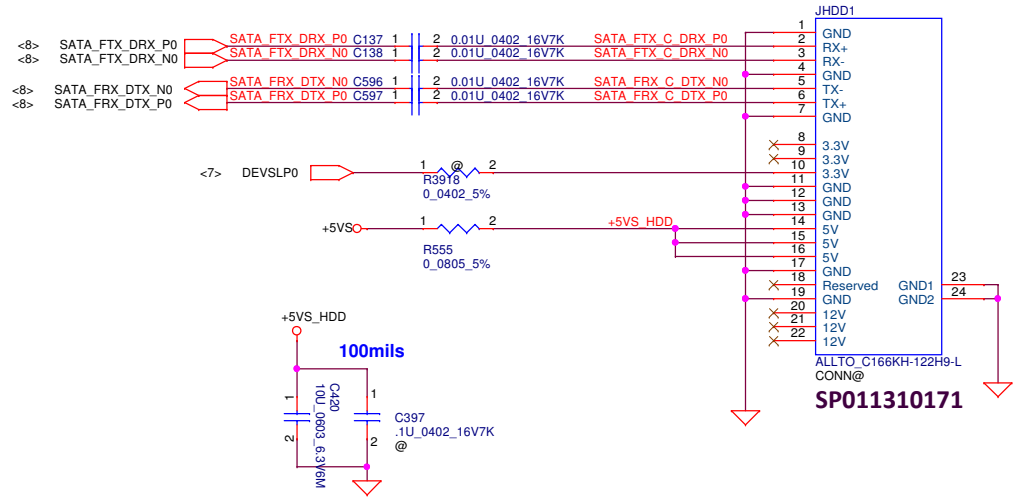

SATA ODD Conn.

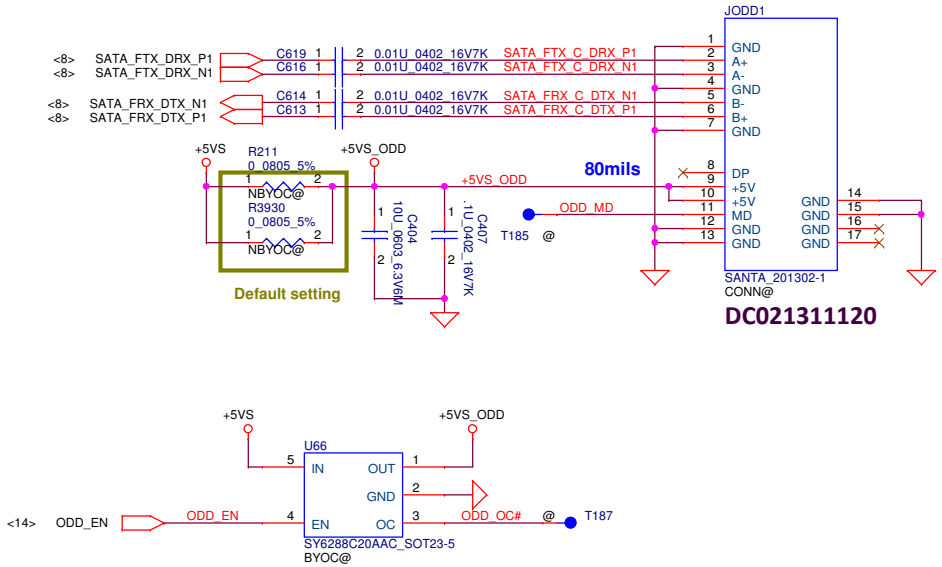

Security Classification	Compal Secret Data			Compal Electronics, Inc.
Issued Date	2014/11/04	Deciphered Date	2016/11/04	Title: HDD/ODD
THIS SHEET OF ENGINEERING DRAWING IS THE PROPRIETARY PROPERTY OF COMPAL ELECTRONICS, INC. AND CONTAINS CONFIDENTIAL AND TRADE SECRET INFORMATION. THIS SHEET MAY NOT BE TRANSFERED FROM THE CUSTODY OF THE COMPETENT DIVISION OF R&D DEPARTMENT EXCEPT AS AUTHORIZED BY COMPAL ELECTRONICS, INC. NEITHER THIS SHEET NOR THE INFORMATION IT CONTAINS MAY BE USED BY OR DISCLOSED TO ANY THIRD PARTY WITHOUT PRIOR WRITTEN CONSENT OF COMPAL ELECTRONICS, INC.				Size: Custom; Document Number: B5W1E_LA-D121P; Rev: 1.0
				Date: Thursday, April 16, 2015; Sheet 18 of 33

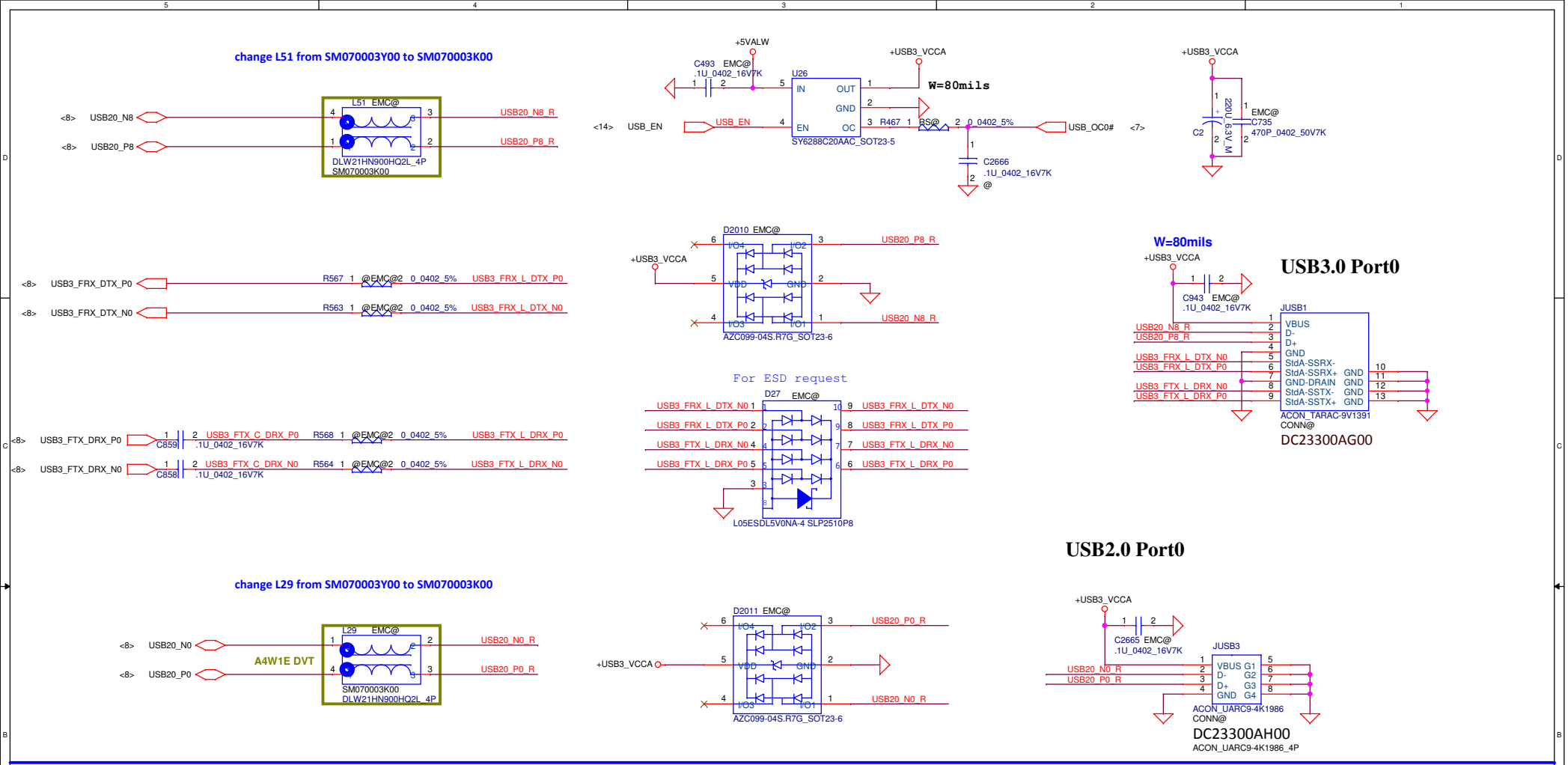

ON/OFF BTN

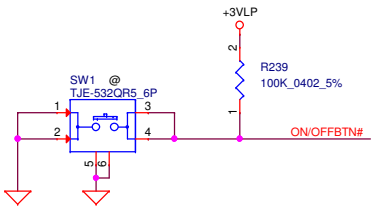

USB & CR/B

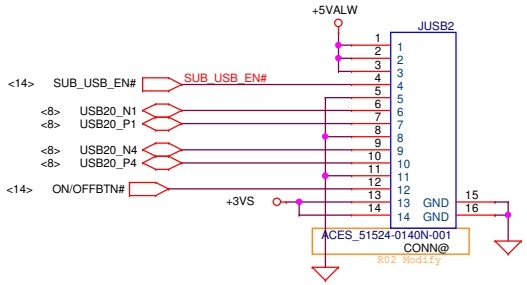

Security Classification	Compal Secret Data			Compal Electronics, Inc.
Issued Date	2014/03/27	Deciphered Date	2016/03/27	Title: USB2.0 / USB3.0
Size: Custom	Document Number: B5W1E_LA-D121P			Rev: 1.0
Date: Thursday, April 16, 2015	Sheet 19 of 33			

THIS SHEET OF ENGINEERING DRAWING IS THE PROPRIETARY PROPERTY OF COMPAL ELECTRONICS, INC. AND CONTAINS CONFIDENTIAL AND TRADE SECRET INFORMATION. THIS SHEET MAY NOT BE TRANSFERED FROM THE CUSTODY OF THE COMPETENT DIVISION OF R&D DEPARTMENT EXCEPT AS AUTHORIZED BY COMPAL ELECTRONICS, INC. NEITHER THIS SHEET NOR THE INFORMATION IT CONTAINS MAY BE USED BY OR DISCLOSED TO ANY THIRD PARTY WITHOUT PRIOR WRITTEN CONSENT OF COMPAL ELECTRONICS, INC.

KB Conn.

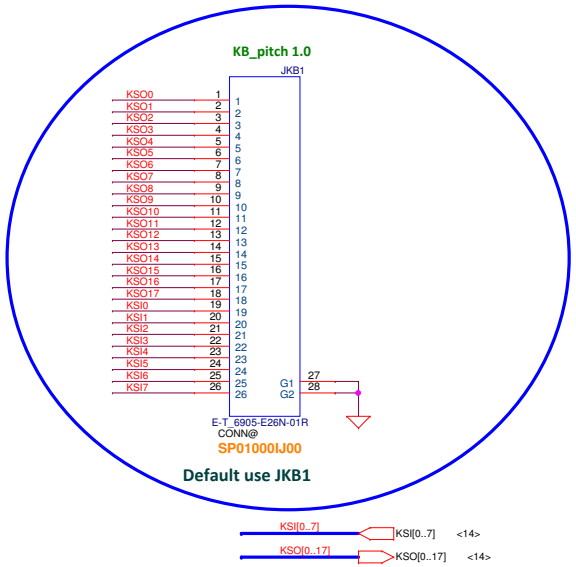

TP/B Conn.

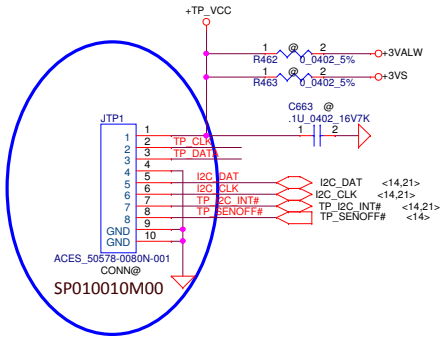

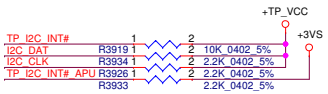

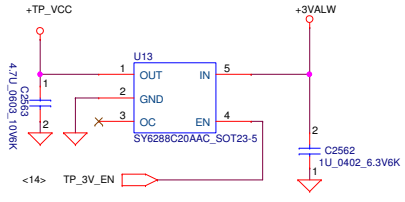

TP_PWR_EN follow SYSON behavior

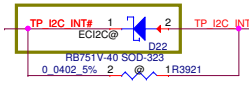

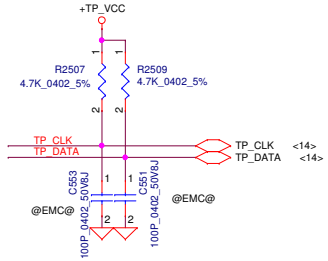

Lid Switch

(Hall Effect Switch)

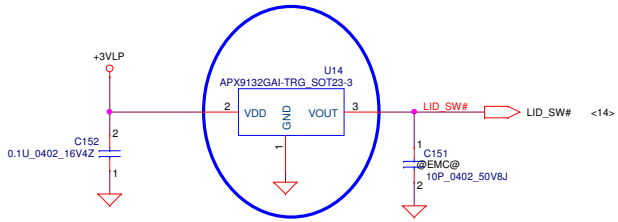

Modify R02,U14 Link CIS symbol

TPM Board for 2015

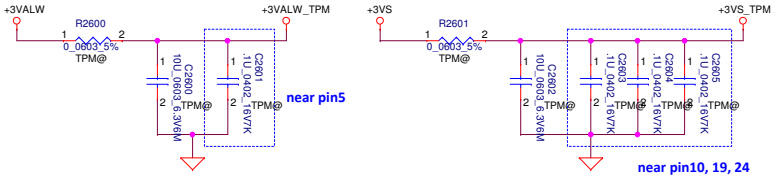

BADD	SELECTION
0	EEh - EFh
* 1	7Eh - 7Fh

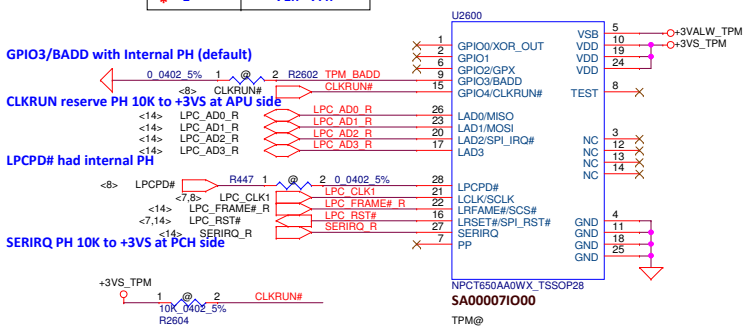

LED

Dual Amber+Blue

LTST-S115TBKF-CA (SC50000C500)

VI @ 5 mA :

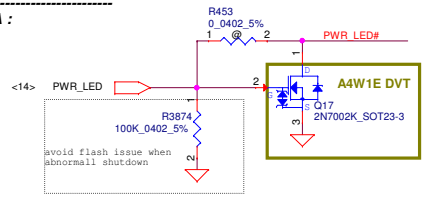

UD5: 1.7 ~ 2.3V
(3.3-1.7)/300=5.71 mA
(3.3-2.3)/300=3.57 mA
R min: 100 ohm
R max 700 ohm

CB5: 2.65~3.05V
(3.3-2.65)/50=13.00 mA
(3.3-3.05)/100=5.0 mA
R min: 50 ohm
R max:475 ohm

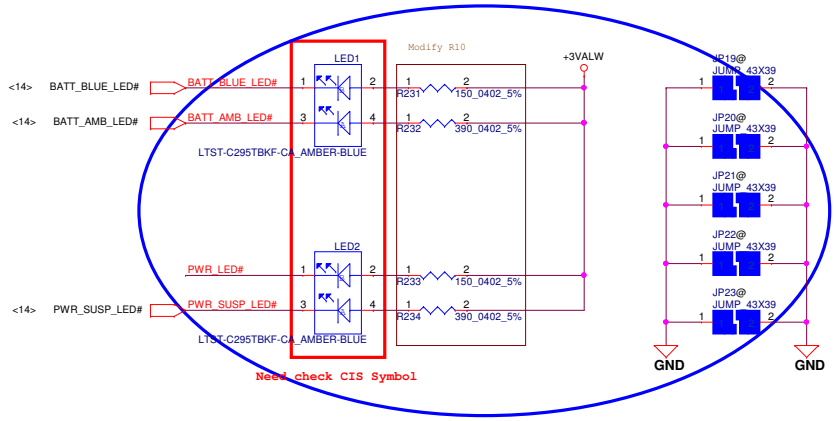

100 1% :SD034100080
150 1% :SD034150080
301 1% :SD034301080
680 1% :SD034680080

120 5% :SD028120080
560 5% :SD028560080
200 5% :SD028200080

Security Classification	Compal Secret Data		
Issued Date	2014/11/04	Deciphered Date	2016/11/04

THIS SHEET OF ENGINEERING DRAWING IS THE PROPRIETARY PROPERTY OF COMPAL ELECTRONICS, INC. AND CONTAINS CONFIDENTIAL AND TRADE SECRET INFORMATION. THIS SHEET MAY NOT BE TRANSFERED FROM THE CUSTODY OF THE COMPETENT DIVISION OF R&D DEPARTMENT EXCEPT AS AUTHORIZED BY COMPAL ELECTRONICS, INC. NEITHER THIS SHEET NOR THE INFORMATION IT CONTAINS MAY BE USED BY OR DISCLOSED TO ANY THIRD PARTY WITHOUT PRIOR WRITTEN CONSENT OF COMPAL ELECTRONICS, INC.

Compal Electronics, Inc.

Title: KB/TP/TPM Connector/LED

Size: Custom | Document Number: B5W1E_LA-D121P | Rev: 1.0

Date: Thursday, April 16, 2015 | Sheet 20 of 33

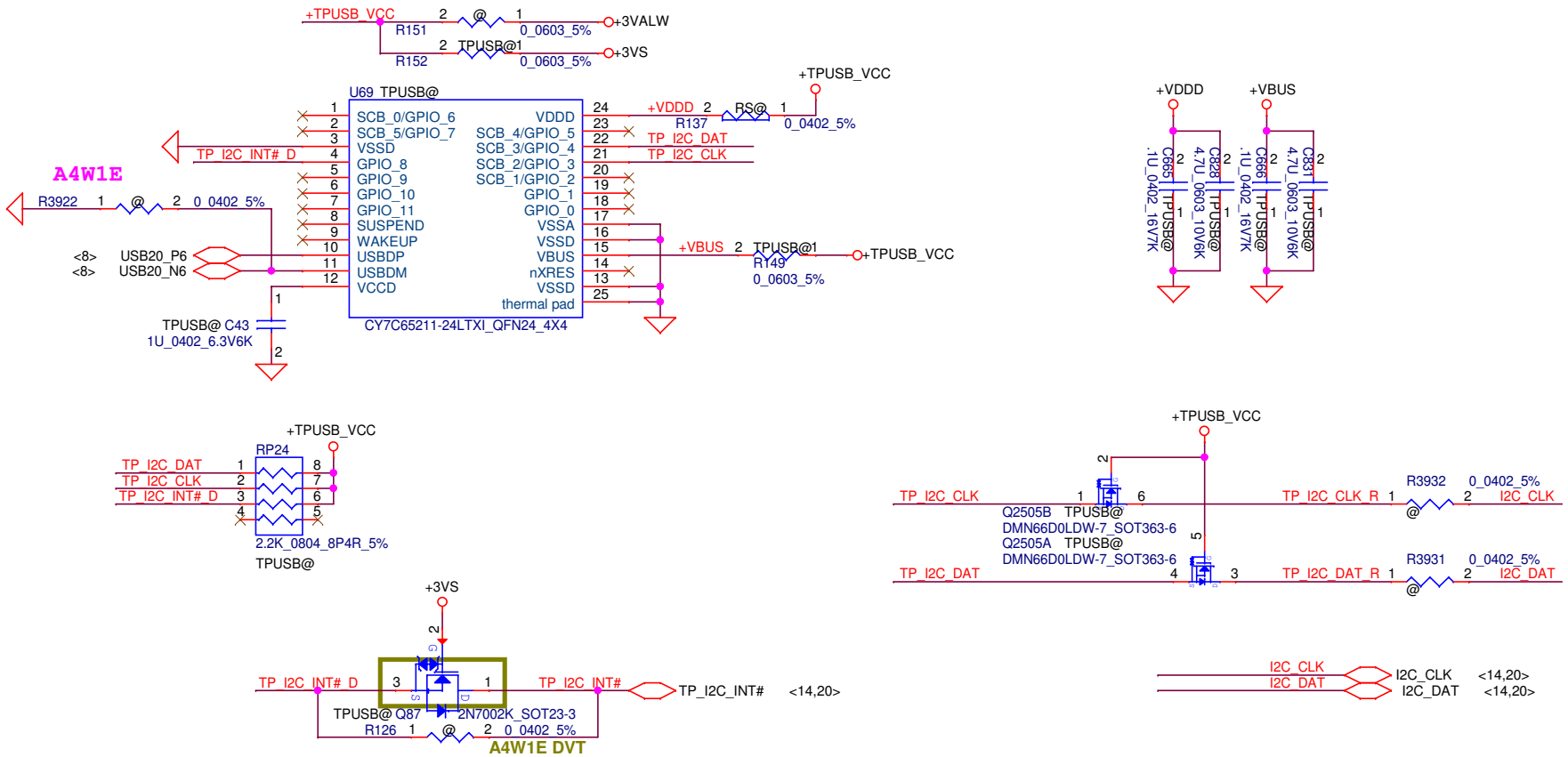

Security Classification	Compal Secret Data		
Issued Date	2014/11/04	Deciphered Date	2016/11/04

THIS SHEET OF ENGINEERING DRAWING IS THE PROPRIETARY PROPERTY OF COMPAL ELECTRONICS, INC. AND CONTAINS CONFIDENTIAL AND TRADE SECRET INFORMATION. THIS SHEET MAY NOT BE TRANSFERED FROM THE CUSTODY OF THE COMPETENT DIVISION OF R&D DEPARTMENT EXCEPT AS AUTHORIZED BY COMPAL ELECTRONICS, INC. NEITHER THIS SHEET NOR THE INFORMATION IT CONTAINS MAY BE USED BY OR DISCLOSED TO ANY THIRD PARTY WITHOUT PRIOR WRITTEN CONSENT OF COMPAL ELECTRONICS, INC.

Compal Electronics, Inc.

Title: USB-I2C CY7C65211

Size: Custom | Document Number: B5W1E_LA-D121P | Rev: 1.0

Date: Thursday, April 16, 2015 | Sheet 21 of 33

FAN1 Conn

FAN Conn

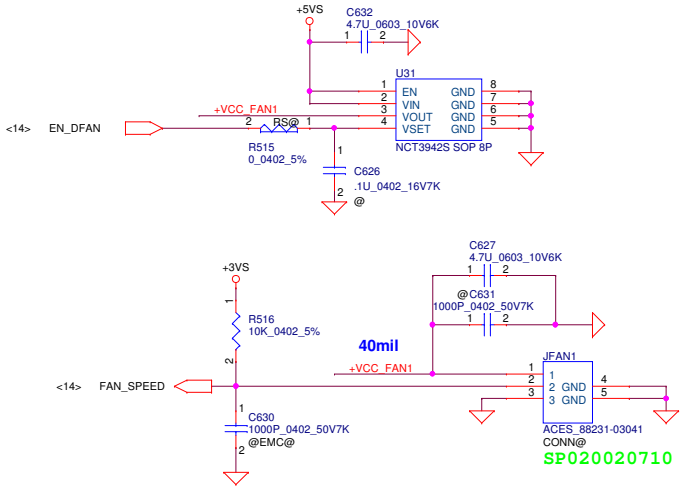

Screw Hole

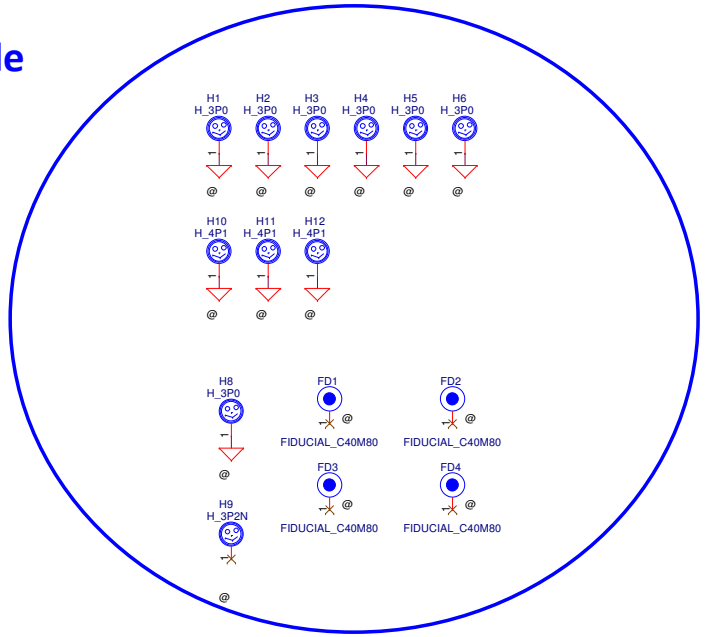

KB BackLight Conn. Reserve

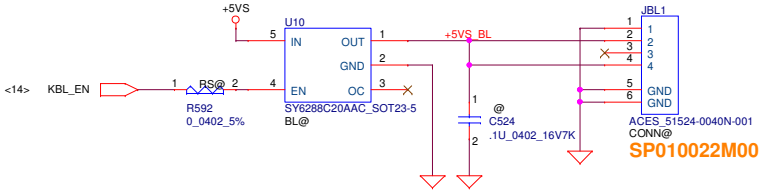

Reset Circuit

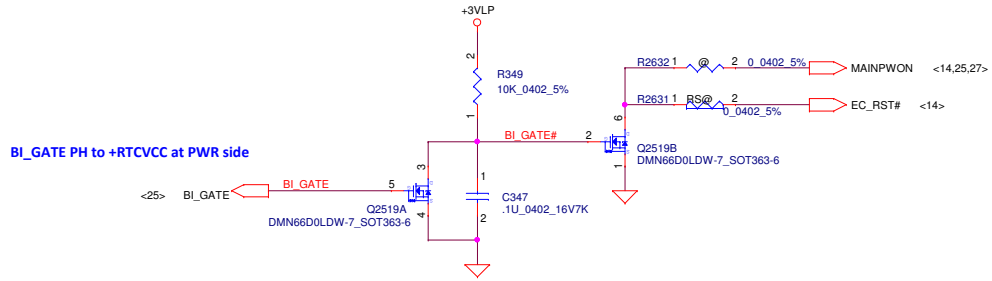

Reset Button

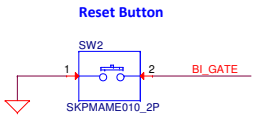

Security Classification	Compal Secret Data			Compal Electronics, Inc.
Issued Date	2014/11/04	Deciphered Date	2016/11/04	Title: FAN/BATT RESET_DEGUB SW
				Size: Custom; Document Number: B5W1E_LA-D121P; Rev: 1.0
				Date: Thursday, April 16, 2015; Sheet 22 of 33

THIS SHEET OF ENGINEERING DRAWING IS THE PROPRIETARY PROPERTY OF COMPAL ELECTRONICS, INC. AND CONTAINS CONFIDENTIAL AND TRADE SECRET INFORMATION. THIS SHEET MAY NOT BE TRANSFERED FROM THE CUSTODY OF THE COMPETENT DIVISION OF R&D DEPARTMENT EXCEPT AS AUTHORIZED BY COMPAL ELECTRONICS, INC. NEITHER THIS SHEET NOR THE INFORMATION IT CONTAINS MAY BE USED BY OR DISCLOSED TO ANY THIRD PARTY WITHOUT PRIOR WRITTEN CONSENT OF COMPAL ELECTRONICS, INC.

+5VALW TO +5VS
+3VALW TO +3VS
Load switch

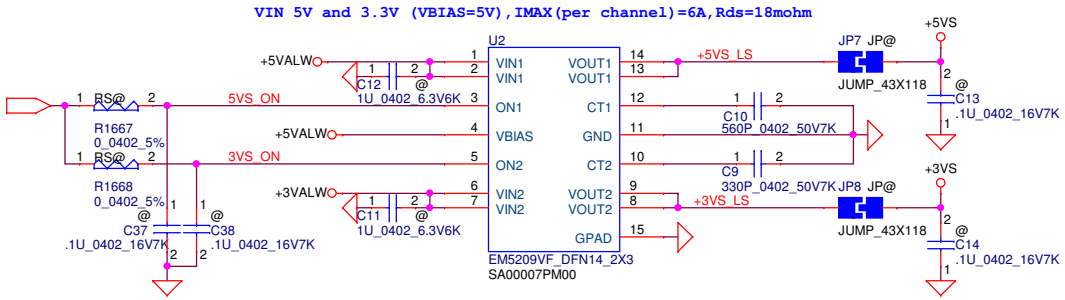

+1.8VALW TO +1.8VS
+1.5V TO +1.5VS
Load switch

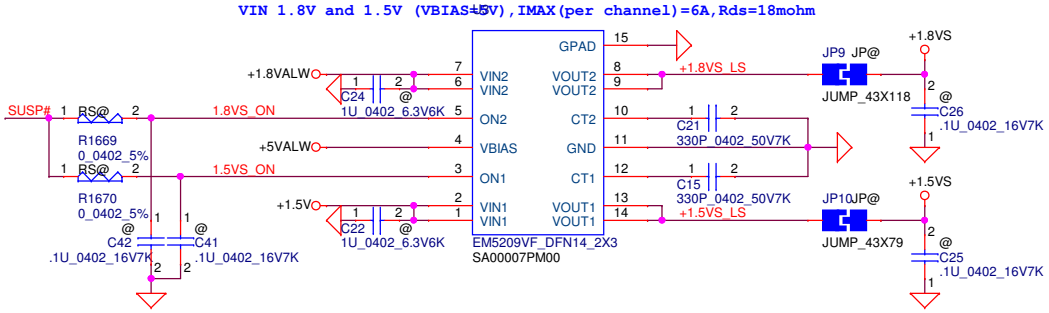

+0.95VALW to +0.95VS

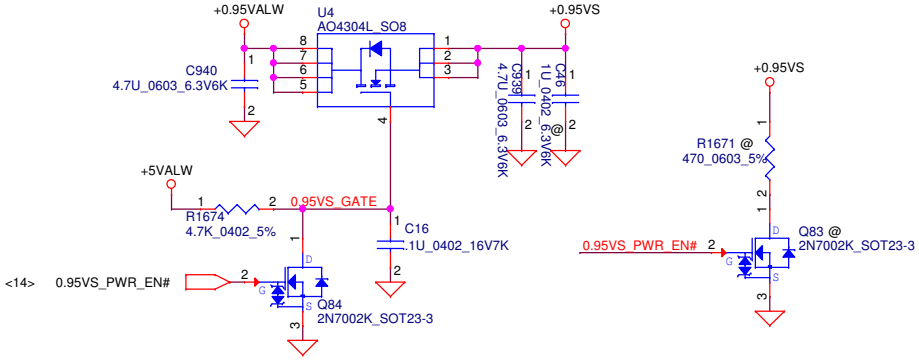

Security Classification	Compal Secret Data			Compal Electronics, Inc.
Issued Date	2014/03/27	Deciphered Date	2016/03/27	Title: P22-DC INTERFACE
THIS SHEET OF ENGINEERING DRAWING IS THE PROPRIETARY PROPERTY OF COMPAL ELECTRONICS, INC. AND CONTAINS CONFIDENTIAL AND TRADE SECRET INFORMATION. THIS SHEET MAY NOT BE TRANSFERED FROM THE CUSTODY OF THE COMPETENT DIVISION OF R&D DEPARTMENT EXCEPT AS AUTHORIZED BY COMPAL ELECTRONICS, INC. NEITHER THIS SHEET NOR THE INFORMATION IT CONTAINS MAY BE USED BY OR DISCLOSED TO ANY THIRD PARTY WITHOUT PRIOR WRITTEN CONSENT OF COMPAL ELECTRONICS, INC.				Size: B; Document Number: B5W1E_LA-D121P; Rev: 1.0
				Date: Thursday, April 16, 2015; Sheet 23 of 33

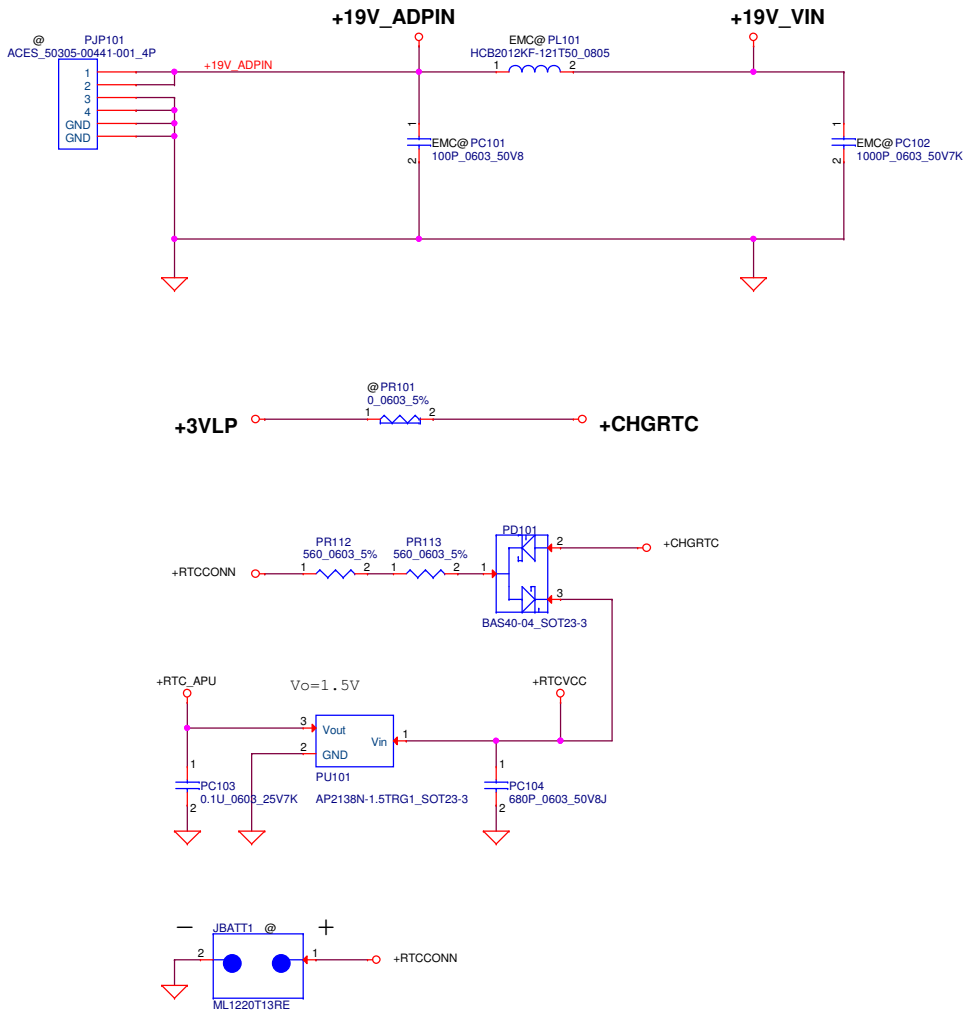

Security Classification	Compal Secret Data			Compal Electronics, Inc.
Issued Date	2014/10/20	Deciphered Date	2016/10/20	Title: DCIN
THIS SHEET OF ENGINEERING DRAWING IS THE PROPRIETARY PROPERTY OF COMPAL ELECTRONICS, INC. AND CONTAINS CONFIDENTIAL AND TRADE SECRET INFORMATION. THIS SHEET MAY NOT BE TRANSFERED FROM THE CUSTODY OF THE COMPETENT DIVISION OF R&D DEPARTMENT EXCEPT AS AUTHORIZED BY COMPAL ELECTRONICS, INC. NEITHER THIS SHEET NOR THE INFORMATION IT CONTAINS MAY BE USED BY OR DISCLOSED TO ANY THIRD PARTY WITHOUT PRIOR WRITTEN CONSENT OF COMPAL ELECTRONICS, INC.				Size: Custom; Document Number: B5W1E_LA-XXXXP; Rev: 1.0
				Date: Thursday, April 16, 2015; Sheet 24 of 33

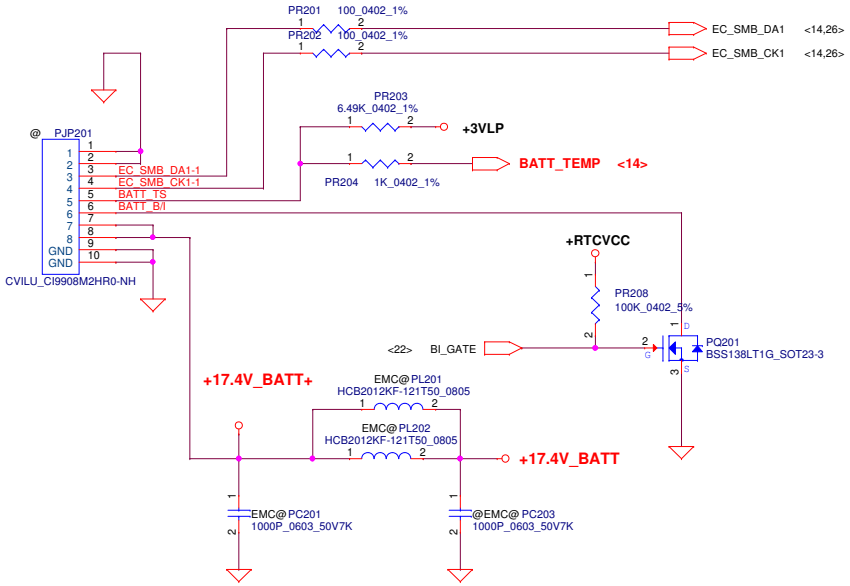

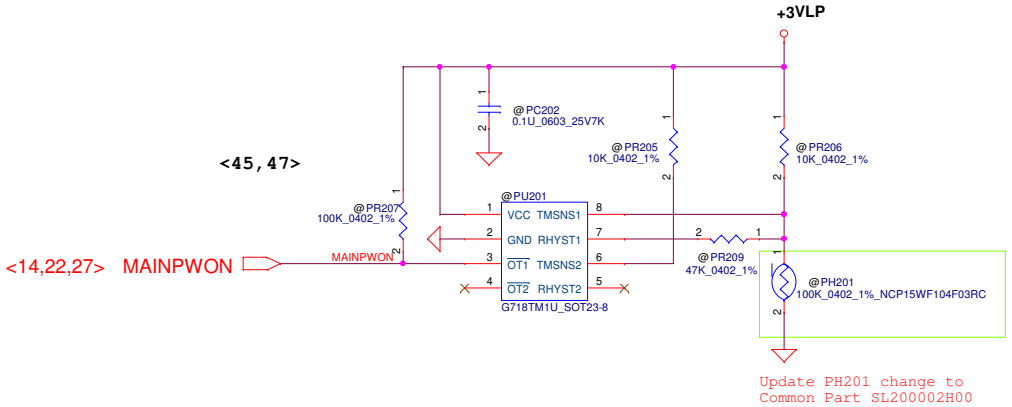


```
---Battery_pin define---      ---Battery Con_pin define---
PIN1 GND                      PIN8 GND
PIN2 GND                      PIN7 GND
PIN3 SMD                      PIN6 SMD
PIN4 SMC                      PIN5 SMC
PIN5 TS                       PIN4 TS
PIN6 B/I                      PIN3 B/I
PIN7 Batt+                    PIN2 Batt+
PIN8 Batt+                    PIN1 Batt+
```

For KB9022 OTP	Active	Recovery
VCIN0_PH(V)	92C, 1V	56C, 2.V
PH202(ohm)	7.3K	26.11K

For KB9012 sense 20mΩ	Active	Recovery
45W	48.15W, 0.73V	38.7W,0.59V
65W	69.55W, 0.73V	55.9W,0.59V

PH202 under CPU botten side :
CPU thermal protection at 92 degree C (shutdown)
Recovery at 56 degree C

2013/10/02
Add for ENE9022 Battery Voltage drop detection.
Connect to ENE9022 pin64 AD1.

Reserve for 2-cell design

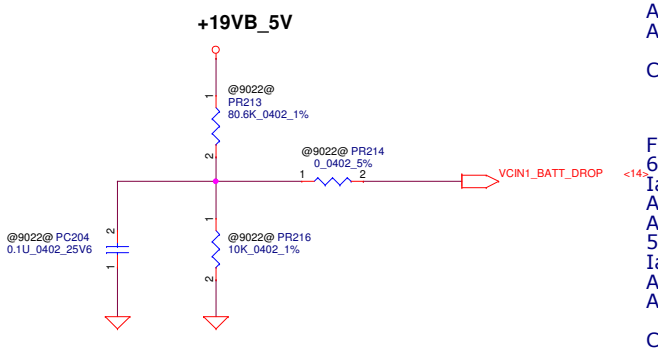

For 45W adapter==>action 48.15W , Recovery 38.7W
48.15W:
Iada= 0~2.253A (48.15W/19V=2.534A)
ADP_I=20*Iada*Rsense
ADP_I=20*2.534*0.02=1.01
38.7W:
Iada= 0~2.036A (38.7W/19V=2.036A)
ADP_I=20*Iada*Rsense
ADP_I=20*2.036*0.02=0.814

CP=45W*0.85=38.25W

For 65W adapter==>action 69.55W , Recovery 55.9W
69.55W:
Iada= 0~3.661A (69.55W/19V=3.661A)
ADP_I=20*Iada*Rsense
ADP_I=20*3.661*0.02=1.464
55.9W:
Iada= 0~2.942A (55.9W/19V=2.942A)
ADP_I=20*Iada*Rsense
ADP_I=20*2.942*0.02=1.177

CP=65W*0.85=55.25W

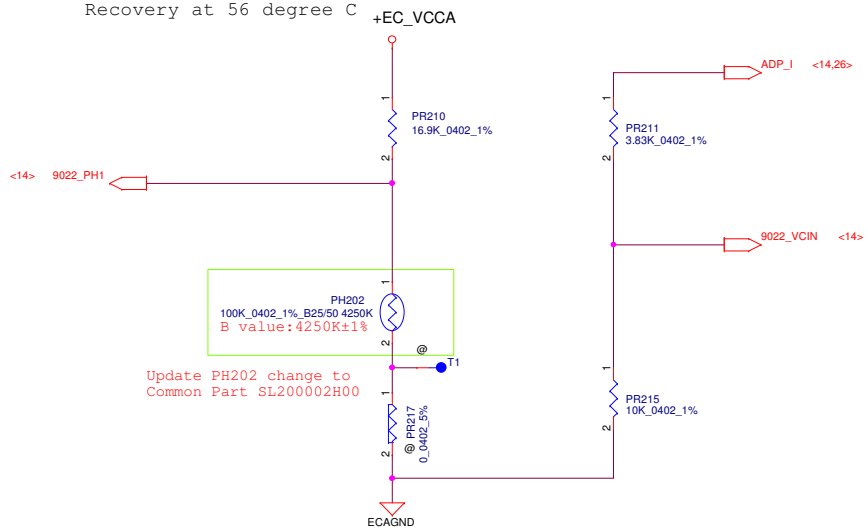

Security Classification	Compal Secret Data		
Issued Date	2014/10/20	Deciphered Date	2016/10/20

THIS SHEET OF ENGINEERING DRAWING IS THE PROPRIETARY PROPERTY OF COMPAL ELECTRONICS, INC. AND CONTAINS CONFIDENTIAL AND TRADE SECRET INFORMATION. THIS SHEET MAY NOT BE TRANSFERED FROM THE CUSTODY OF THE COMPETENT DIVISION OF R&D DEPARTMENT EXCEPT AS AUTHORIZED BY COMPAL ELECTRONICS, INC. NEITHER THIS SHEET NOR THE INFORMATION IT CONTAINS MAY BE USED BY OR DISCLOSED TO ANY THIRD PARTY WITHOUT PRIOR WRITTEN CONSENT OF COMPAL ELECTRONICS, INC.

Compal Electronics, Inc.

Title: BATTERY CONN / OTP

Size: Custom | Document Number: B5W1E_LA-XXXXP | Rev: 1.0

Date: Thursday, April 16, 2015 | Sheet 25 of 33

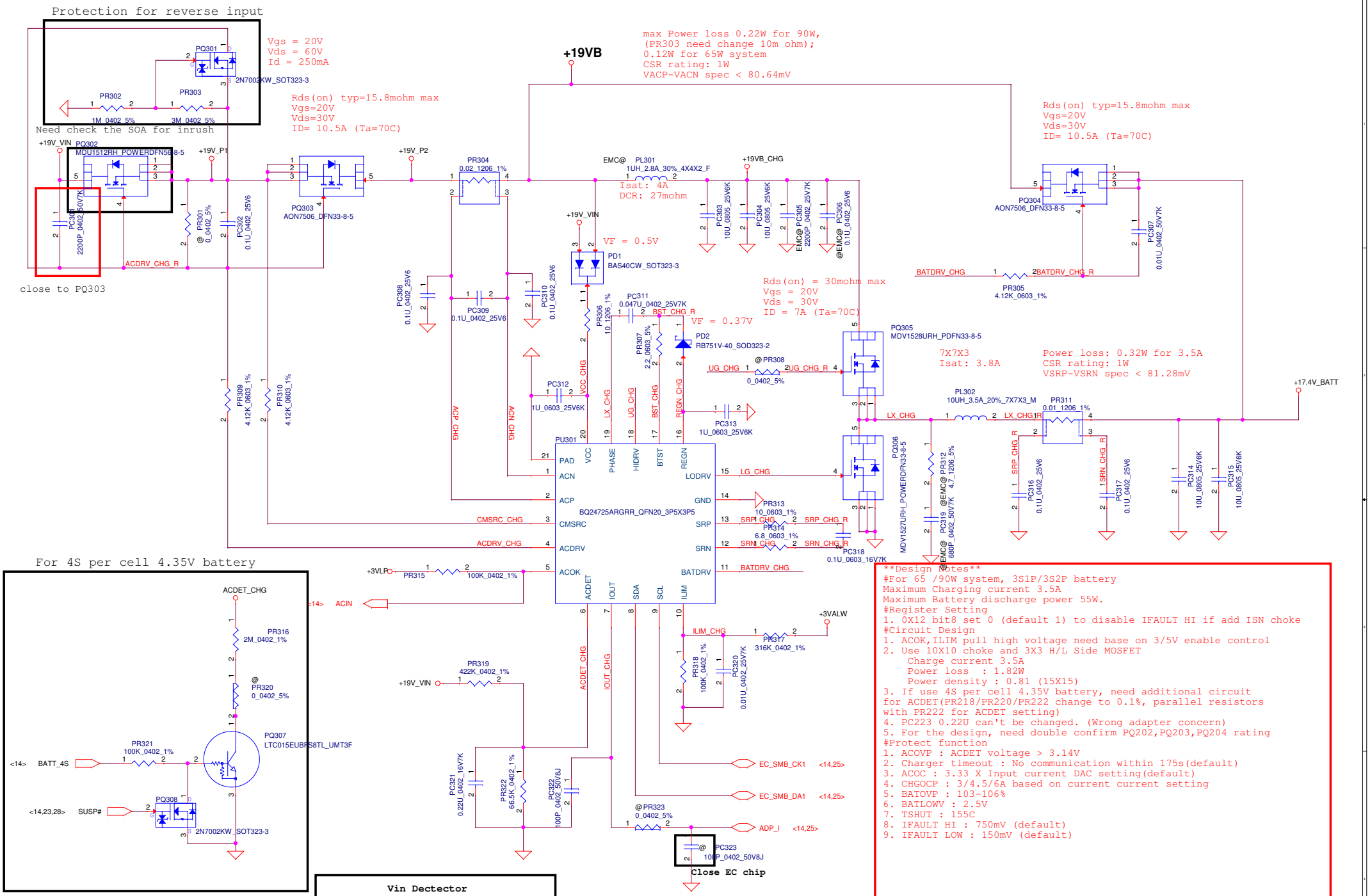
Protection for reverse input
Vgs = 20V
Vds = 60V
Id = 250mA
PQ301
2N7002KW_SOT323-3
PR302
1M_0402_5%
PR303
3M_0402_5%
Rds(on) typ=15.8mohm max
Vgs=20V
Vds=30V
ID= 10.5A (Ta=70C)
Need check the SOA for inrush
+19V_VIN
PQ302
MDU1512RH_POWERDFN56-8-5
+19V_P1
PC301
2200P_0402_50V7K
PR301
@ 0_0402_5%
PC302
0.1U_0402_25V6
ACDRV_CHG_R
close to PQ303
PQ303
AON7506_DFN33-8-5
+19V_P2
PR304
0.02_1206_1%
+19VB
max Power loss 0.22W for 90W,
(PR303 need change 10m ohm);
0.12W for 65W system
CSR rating: 1W
VACP-VACN spec < 80.64mV
EMC@ PL301
1UH_2.8A_30%_4X4X2_F
Isat: 4A
DCR: 27mohm
+19VB_CHG
PC303
10U_0805_25V6K
PC304
10U_0805_25V6K
EMC@ PC305
2200P_0402_25V7K
@EMC@ PC306
0.1U_0402_25V6
+19V_VIN
PD1
BAS40CW_SOT323-3
VF = 0.5V
PC308
0.1U_0402_25V6
PC309
0.1U_0402_25V6
PC310
0.1U_0402_25V6
PR306
10_1206_1%
PC311
0.047U_0402_25V7K
BST_CHG_R
VF = 0.37V
PR307
2.2_0603_5%
PD2
RB751V-40_SOD323-2
Rds(on) = 30mohm max
Vgs = 20V
Vds = 30V
ID = 7A (Ta=70C)
PQ305
MDV1528URH_PDFN33-8-5
@PR308
UG_CHG
UG_CHG_R
0_0402_5%
7X7X3
Isat: 3.8A
Power loss: 0.32W for 3.5A
CSR rating: 1W
VSRP-VSRN spec < 81.28mV
PR309
4.12K_0603_1%
PR310
4.12K_0603_1%
PC312
1U_0603_25V6K
PC313
1U_0603_25V6K
PU301
BQ24725ARGRR_QFN20_3P5X3P5
PAD
ACN
ACP
CMSRC
ACDRV
ACOK
VCC
PHASE
HIDRV
BTST
REGN
LODRV
GND
SRP
SRN
BATDRV
ACDET
IOUT
SDA
SCL
ILIM
LX_CHG
UG_CHG
BST_CHG
REGN_CHG
VCC_CHG
ACP_CHG
ACN_CHG
CMSRC_CHG
ACDRV_CHG
LG_CHG
SRP_CHG
SRN_CHG
BATDRV_CHG
ACDET_CHG
IOUT_CHG
ILIM_CHG
PR313
10_0603_1%
PR314
6.8_0603_1%
PC318
0.1U_0603_16V7K
PQ306
MDV1527URH_POWERDFN33-8-5
PR312
4.7_1206_5%
PC319
680P_0402_50V7K
PL302
10UH_3.5A_20%_7X7X3_M
PR311
0.01_1206_1%
+17.4V_BATT
PQ304
AON7506_DFN33-8-5
PC307
0.01U_0402_50V7K
BATDRV_CHG
BATDRV_CHG_R
PR305
4.12K_0603_1%
SRP_CHG_R
SRN_CHG_R
PC316
0.1U_0402_25V6
PC317
0.1U_0402_25V6
PC314
10U_0805_25V6K
PC315
10U_0805_25V6K
+3VLP
PR315
100K_0402_1%
<14> ACIN
+3VALW
PR317
316K_0402_1%
PR318
100K_0402_1%
PC320
0.01U_0402_25V7K
PR319
422K_0402_1%
+19V_VIN
PC321
0.22U_0402_16V7K
PR322
66.5K_0402_1%
PC322
100P_0402_50V8J
@PR323
0_0402_5%
EC_SMB_CK1 <14,25>
EC_SMB_DA1 <14,25>
ADP_I <14,25>
@ PC323
100P_0402_50V8J
Close EC chip
For 4S per cell 4.35V battery
ACDET_CHG
PR316
2M_0402_1%
@ PR320
0_0402_5%
PQ307
LTC015EUBFS8TL_UMT3F
PR321
100K_0402_1%
<14> BATT_4S
PQ308
<14,23,28> SUSP#
2N7002KW_SOT323-3
Design Notes
#For 65 /90W system, 3S1P/3S2P battery
Maximum Charging current 3.5A
Maximum Battery discharge power 55W.
#Register Setting
1. 0X12 bit8 set 0 (default 1) to disable IFAULT HI if add ISN choke
#Circuit Design
1. ACOK,ILIM pull high voltage need base on 3/5V enable control
2. Use 10X10 choke and 3X3 H/L Side MOSFET
Charge current 3.5A
Power loss : 1.82W
Power density : 0.81 (15X15)
3. If use 4S per cell 4.35V battery, need additional circuit for ACDET(PR218/PR220/PR222 change to 0.1%, parallel resistors with PR222 for ACDET setting)
4. PC223 0.22U can't be changed. (Wrong adapter concern)
5. For the design, need double confirm PQ202,PQ203,PQ204 rating
#Protect function
1. ACOVP : ACDET voltage > 3.14V
2. Charger timeout : No communication within 175s(default)
3. ACOC : 3.33 X Input current DAC setting(default)
4. CHGOCP : 3/4.5/6A based on current current setting
5. BATOVP : 103-106%
6. BATLOWV : 2.5V
7. TSHUT : 155C
8. IFAULT HI : 750mV (default)
9. IFAULT LOW : 150mV (default)
Vin Dectector
Min. Typ Max.
L-->H 17.16V 17.63V 18.12V
H-->L 16.76V 17.22V 17.70V
VILIM = 20*ILIM*Rsr
ILIM = 3.3*100/(100+316)/20/0.01
= 3.966 A
Security Classification
Compal Secret Data
Issued Date
2014/10/20
Deciphered Date
2016/10/20
THIS SHEET OF ENGINEERING DRAWING IS THE PROPRIETARY PROPERTY OF COMPAL ELECTRONICS, INC. AND CONTAINS CONFIDENTIAL AND TRADE SECRET INFORMATION. THIS SHEET MAY NOT BE TRANSFERED FROM THE CUSTODY OF THE COMPETENT DIVISION OF R&D DEPARTMENT EXCEPT AS AUTHORIZED BY COMPAL ELECTRONICS, INC. NEITHER THIS SHEET NOR THE INFORMATION IT CONTAINS MAY BE USED BY OR DISCLOSED TO ANY THIRD PARTY WITHOUT PRIOR WRITTEN CONSENT OF COMPAL ELECTRONICS, INC.
Compal Electronics, Inc.
Title
CHARGER
Size Custom
Document Number
B5W1E_LA-XXXXP
Rev 1.0
Date: Thursday, April 16, 2015
Sheet 26 of 33

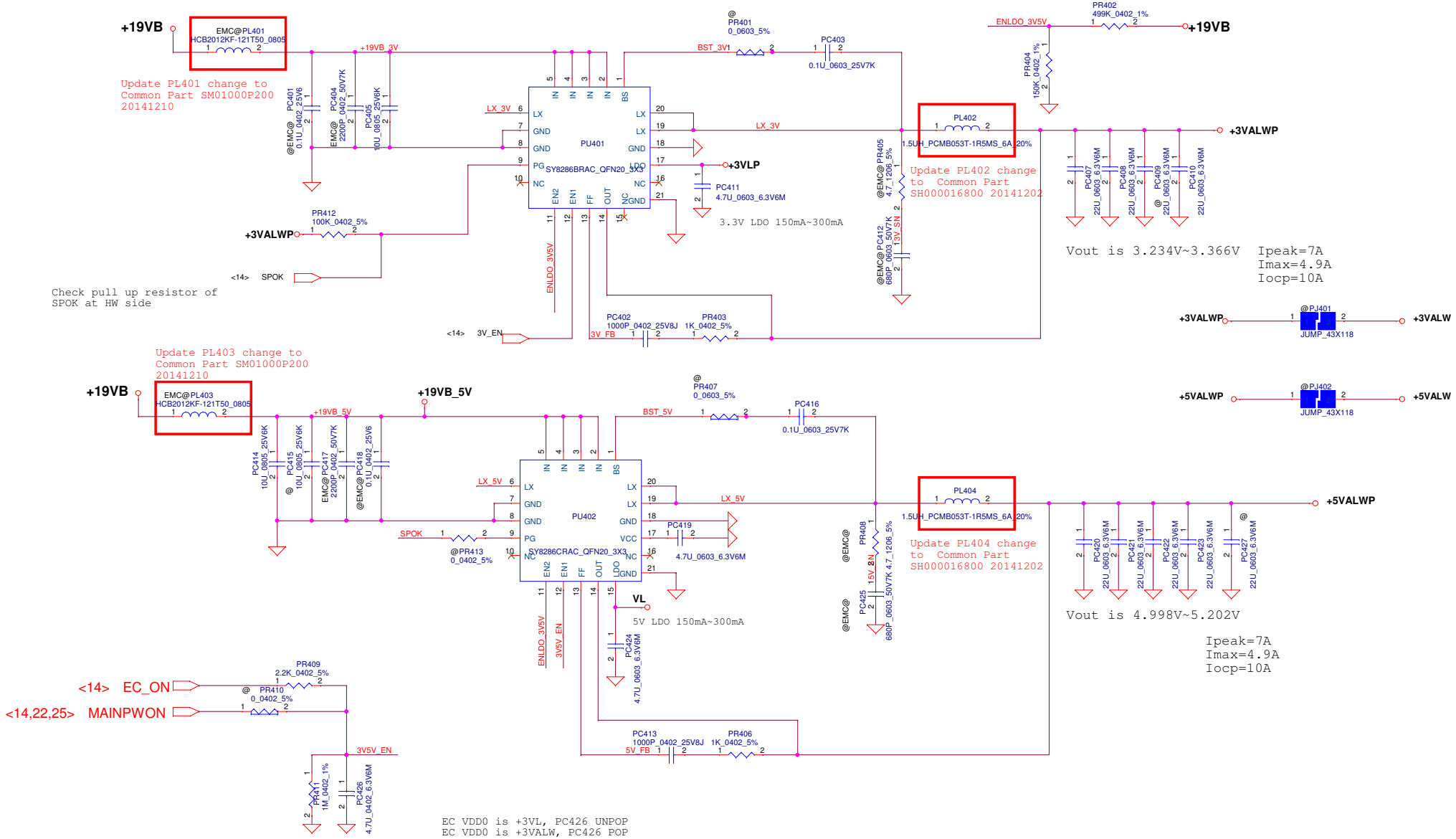

Security Classification	Compal Secret Data		
Issued Date	2014/10/20	Deciphered Date	2016/10/20

THIS SHEET OF ENGINEERING DRAWING IS THE PROPRIETARY PROPERTY OF COMPAL ELECTRONICS, INC. AND CONTAINS CONFIDENTIAL AND TRADE SECRET INFORMATION. THIS SHEET MAY NOT BE TRANSFERED FROM THE CUSTODY OF THE COMPETENT DIVISION OF R&D DEPARTMENT EXCEPT AS AUTHORIZED BY COMPAL ELECTRONICS, INC. NEITHER THIS SHEET NOR THE INFORMATION IT CONTAINS MAY BE USED BY OR DISCLOSED TO ANY THIRD PARTY WITHOUT PRIOR WRITTEN CONSENT OF COMPAL ELECTRONICS, INC.

Compal Electronics, Inc.

Title: +3VALW/+5VALW

Size: Custom | Document Number: B5W1E_LA-XXXXP | Rev: 1.0

Date: Thursday, April 16, 2015 | Sheet 27 of 33

Module model information

RT8207M_V1.mdd For Single layer
RT8207M_V2.mdd For Dual layer

Pin19 need pull separate from +1.5VP.
If you have +1.5V and +0.75V sequence question,
you can change from +1.5VP to +1.5VS.

0.75Volt +/- 5%
TDC 0.7A
Peak Current 1A

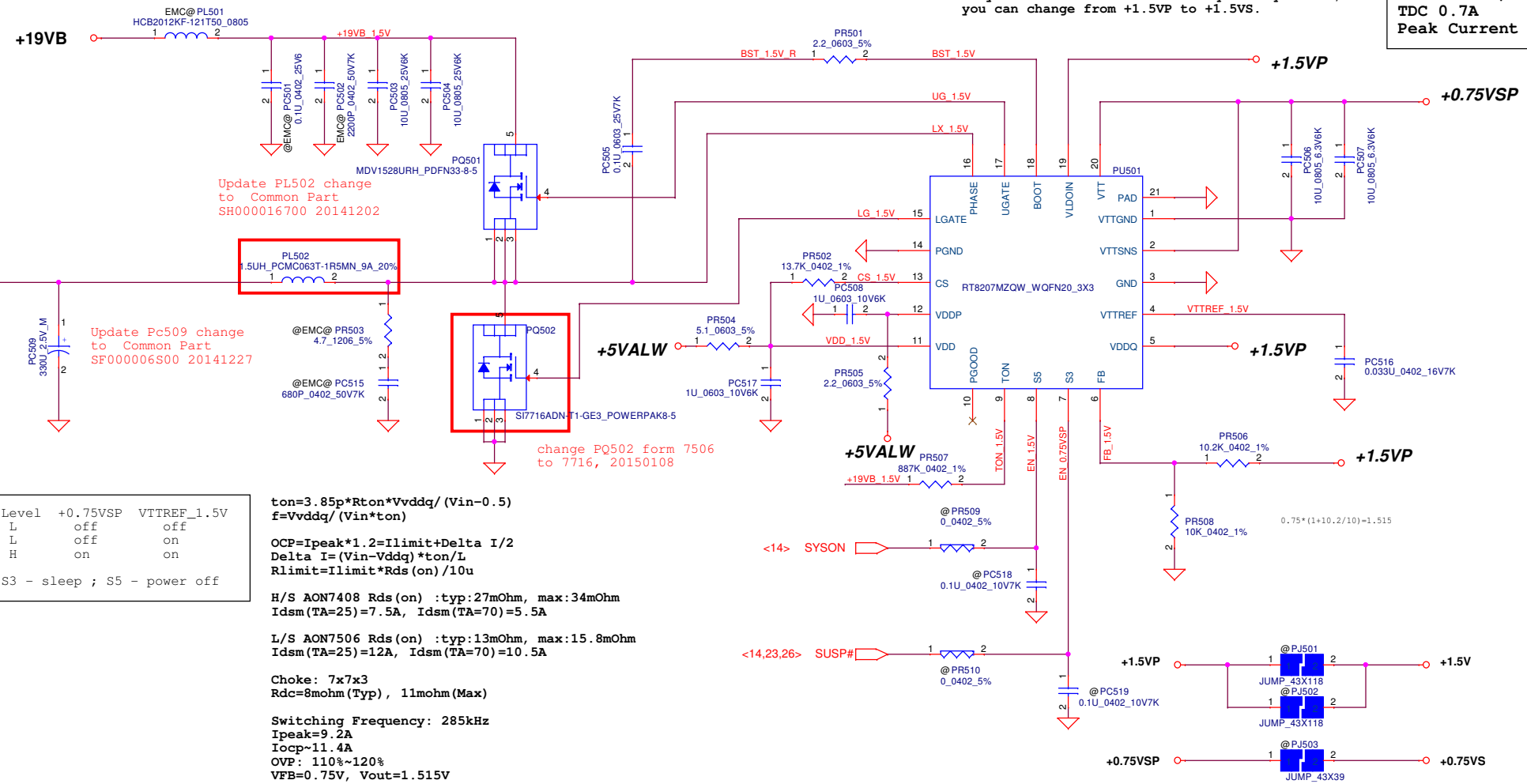

Mode	Level	+0.75VSP	VTTREF_1.5V
S5	L	off	off
S3	L	off	on
S0	H	on	on

Note: S3 - sleep ; S5 - power off

ton=3.85p*Rton*Vvddq/(Vin-0.5)
f=Vvddq/(Vin*ton)

OCP=Ipeak*1.2=Ilimit+Delta I/2
Delta I=(Vin-Vddq)*ton/L
Rlimit=Ilimit*Rds(on)/10u

H/S AON7408 Rds(on) :typ:27mOhm, max:34mOhm
Idsm(TA=25)=7.5A, Idsm(TA=70)=5.5A

L/S AON7506 Rds(on) :typ:13mOhm, max:15.8mOhm
Idsm(TA=25)=12A, Idsm(TA=70)=10.5A

Choke: 7x7x3
Rdc=8mohm(Typ), 11mohm(Max)

Switching Frequency: 285kHz
Ipeak=9.2A
Iocp~11.4A
OVP: 110%~120%
VFB=0.75V, Vout=1.515V

Security Classification	Compal Secret Data		
Issued Date	2014/10/20	Deciphered Date	2016/10/20

THIS SHEET OF ENGINEERING DRAWING IS THE PROPRIETARY PROPERTY OF COMPAL ELECTRONICS, INC. AND CONTAINS CONFIDENTIAL AND TRADE SECRET INFORMATION. THIS SHEET MAY NOT BE TRANSFERED FROM THE CUSTODY OF THE COMPETENT DIVISION OF R&D DEPARTMENT EXCEPT AS AUTHORIZED BY COMPAL ELECTRONICS, INC. NEITHER THIS SHEET NOR THE INFORMATION IT CONTAINS MAY BE USED BY OR DISCLOSED TO ANY THIRD PARTY WITHOUT PRIOR WRITTEN CONSENT OF COMPAL ELECTRONICS, INC.

Compal Electronics, Inc.

Title: +1.5VP/+0.75VSP

Size: Custom | Document Number: B5W1E_LA-XXXXP | Rev: 1.0

Date: Thursday, April 16, 2015 | Sheet 28 of 33

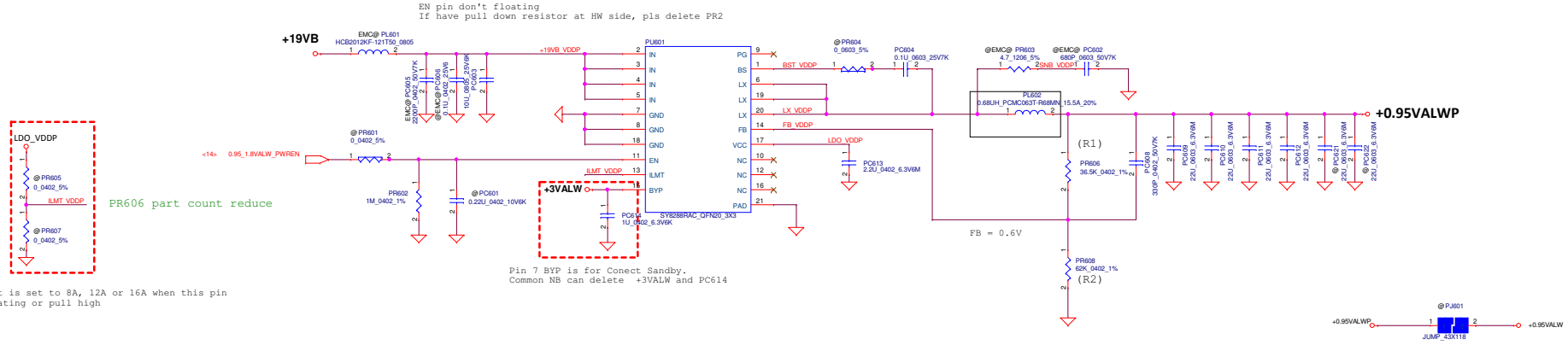

TDC 8A

VFB=0.6V

Vout1=0.6V* (1+R1/R2)=1.062V

Vout2=0.6V*(1+R1/(R2+R3))=0.96V

VDDP_ALW_VCTRL	VDDPALW
1	1.062V
0	0.96V

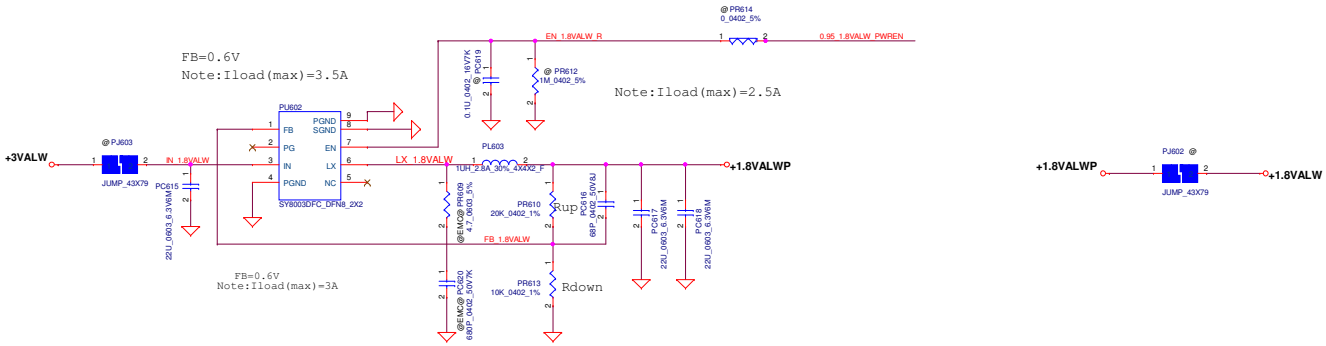

Note:
When design Vin=5V, please stuff snubber
to prevent Vin damage

Vout=0.6V* (1+Rup/Rdown)

Security Classification	Compal Secret Data		
Issued Date	2014/10/20	Deciphered Date	2016/10/20

THIS SHEET OF ENGINEERING DRAWING IS THE PROPRIETARY PROPERTY OF COMPAL ELECTRONICS, INC. AND CONTAINS CONFIDENTIAL AND TRADE SECRET INFORMATION. THIS SHEET MAY NOT BE TRANSFERED FROM THE CUSTODY OF THE COMPETENT DIVISION OF R&D DEPARTMENT EXCEPT AS AUTHORIZED BY COMPAL ELECTRONICS, INC. NEITHER THIS SHEET NOR THE INFORMATION IT CONTAINS MAY BE USED BY OR DISCLOSED TO ANY THIRD PARTY WITHOUT PRIOR WRITTEN CONSENT OF COMPAL ELECTRONICS, INC.

Compal Electronics, Inc.

Title: +0.95VALW/+1.8VALW

Size: Custom | Document Number: B5W1E_LA-XXXXP | Rev: 1.0

Date: Thursday, April 16, 2015 | Sheet 29 of 33

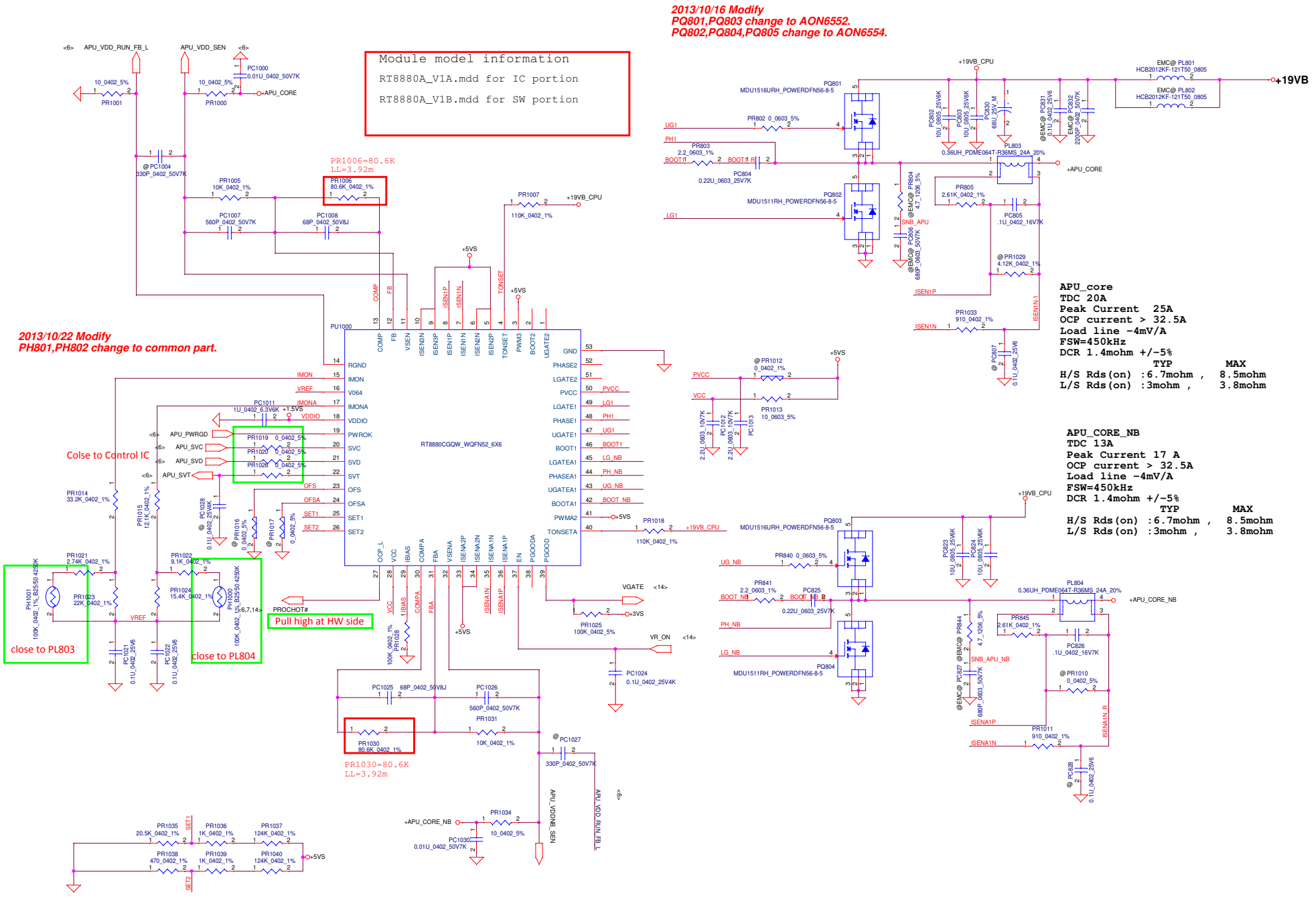

Delete PR834.PR835.PR836.PR839.PR840.PR841,
follow vender FAE suggest.
2013/11/29 modify.

Security Classification	Compal Secret Data		
Issued Date	2012/06/19	Deciphered Date	2012/07/31

THIS SHEET OF ENGINEERING DRAWING IS THE PROPRIETARY PROPERTY OF COMPAL ELECTRONICS, INC. AND CONTAINS CONFIDENTIAL AND TRADE SECRET INFORMATION. THIS SHEET MAY NOT BE TRANSFERED FROM THE CUSTODY OF THE COMPETENT DIVISION OF R&D DEPARTMENT EXCEPT AS AUTHORIZED BY COMPAL ELECTRONICS, INC. NEITHER THIS SHEET NOR THE INFORMATION IT CONTAINS MAY BE USED BY OR DISCLOSED TO ANY THIRD PARTY WITHOUT PRIOR WRITTEN CONSENT OF COMPAL ELECTRONICS, INC.

Compal Electronics, Inc.

Title: CPU_CORE

Size: Custom | Document Number: B5W1E_LA-XXXXP | Rev: 1.0

Date: Thursday, April 16, 2015 | Sheet 30 of 33

+APU_CORE (36.4)

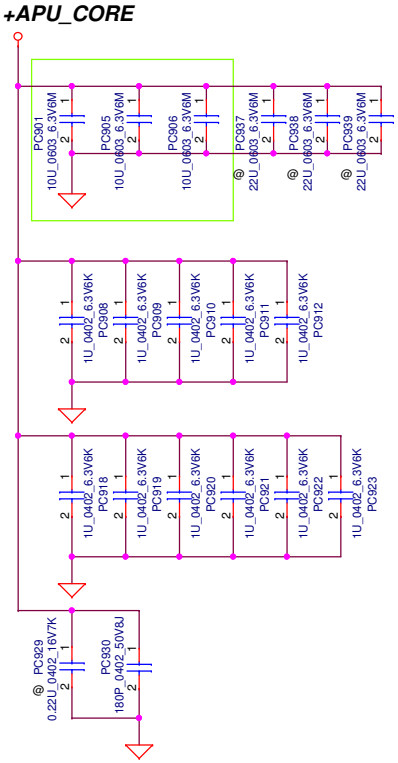

+APU_CORE_NB (36.5)

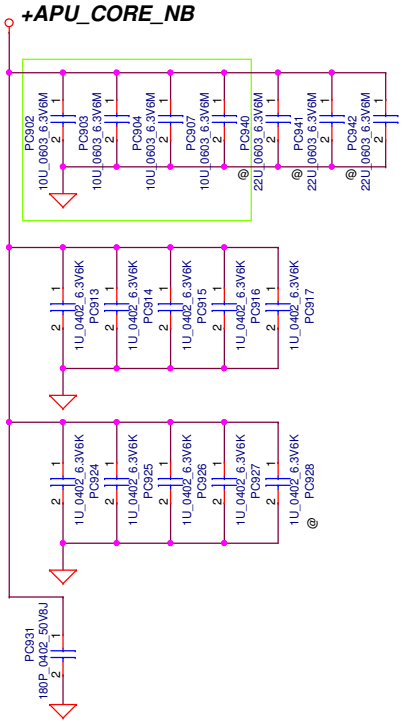

+APU_CORE

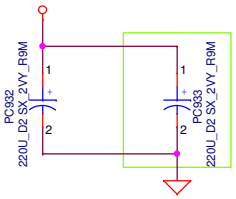

+APU_CORE_NB

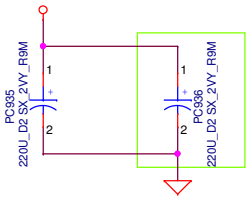

Security Classification	Compal Secret Data			Compal Electronics, Inc.
Issued Date	2014/10/20	Deciphered Date	2016/10/20	Title: +APU_CORE Cap
				Size: Custom; Document Number: B5W1E_LA-XXXXP; Rev: 1.0
				Date: Thursday, April 16, 2015; Sheet 31 of 33

THIS SHEET OF ENGINEERING DRAWING IS THE PROPRIETARY PROPERTY OF COMPAL ELECTRONICS, INC. AND CONTAINS CONFIDENTIAL AND TRADE SECRET INFORMATION. THIS SHEET MAY NOT BE TRANSFERED FROM THE CUSTODY OF THE COMPETENT DIVISION OF R&D DEPARTMENT EXCEPT AS AUTHORIZED BY COMPAL ELECTRONICS, INC. NEITHER THIS SHEET NOR THE INFORMATION IT CONTAINS MAY BE USED BY OR DISCLOSED TO ANY THIRD PARTY WITHOUT PRIOR WRITTEN CONSENT OF COMPAL ELECTRONICS, INC.

Version change list (P.I.R. List)

Item	Fixed Issue	Reason for change	Rev.	PG#	Modify List	Date	Phase
01	Design update	Change the RTC to can charge	01	24	Change the JBATT1 from SP07000H700 to SP093MX0000 Change the PD101 from SC2N202U010 to SCSS4004010	02/09	EVT
02	Design update	Solution Change	01	31	Remove the PC934	02/25	EVT
03	Design update	Solution Change	01	31	Change the PC932 PC933 PC935 PC936 to SGA20221D40	03/10	EVT
04	Design update	Solution Change	02	26,27 28,29	change PR401, PR407, PR604, PR510, PR509, PR320, PR601, PR614 to R-short	04/09	PVT
05							
06							
07							
08							

THIS SHEET OF ENGINEERING DRAWING IS THE PROPRIETARY PROPERTY OF COMPAL ELECTRONICS, INC. AND CONTAINS CONFIDENTIAL AND TRADE SECRET INFORMATION. THIS SHEET MAY NOT BE TRANSFERED FROM THE CUSTODY OF THE COMPETENT DIVISION OF R&D DEPARTMENT EXCEPT AS AUTHORIZED BY COMPAL ELECTRONICS, INC. NEITHER THIS SHEET NOR THE INFORMATION IT CONTAINS MAY BE USED BY OR DISCLOSED TO ANY THIRD PARTY WITHOUT PRIOR WRITTEN CONSENT OF COMPAL ELECTRONICS, INC.

Security Classification	Compal Secret Data		
Issued Date	2014/10/20	Deciphered Date	2016/10/20

Compal Electronics, Inc.

Title: PWR_PIR1

Size: Custom | Document Number: B5W1E_LA-XXXXP | Rev: 1.0

Date: Thursday, April 16, 2015 | Sheet 32 of 33

Item	Page	Date	Reason for change	Modify Item	Phase
01		2015/02/05	modify form A4W1E, i/o copy from Z5W1M		DVT
02	11	2015/02/06	update to DIMM*2		
03	06		del JHDT1 circuit	del JHDT1 conn, del R662~667/ R671~673 /RP11	
04	20	2015/02/09	for TP diff device	change RP20 to R3922/R3926/R3931	
05	18		del EXT HDD connector		
06	14	2015/02/11	define 15" EVT	R1564 change to 200k 1%	
07			Change all EMI/ESD BS to EMC@		
08	15	2015/02/13	del JP25 (confirm with EMI Eddie)		
09	21	2015/02/24	schematic update	del Q2520 and change to 2505A	
10	07			APU_GPIO49 pull high change S0 domain, (+3VS)	
11	14			R1562/3949/3950 change to 1% tolerance	
12	15			replace R3959~3962 by RP10	
13	15			add R3935/R3936 for PH LAN_PME# & CLKREQ#	
14		2015/02/25	update power circuit.		
15	14		for common use Z5W1M I/O board	add EC Pin 108 "SUB_USB_EN#"	
16	17		schematic update	change R3956 to 0 ohm (@) , and unpop R3955	
17	23	2015/02/26	schematic update	net swap D10 and 3/5V load switch for layout.	
18	17			R139/140 change to 0 ohm from R-S.	
19	08			C795 change to 5.6P (follow A4W1E)	
20	07			Change R668 to PH +3VALW for Project define.	
21	07			Change R694/R695 to 1k ohm for Platform define	
22	18	2015/03/03	schematic update	JODD1 pin 16&17 not connect to GND	
23	14			add dummy R3949/R3950 for CZL ID	
24	05			replace RP2 by R75~R77	
25	13,19,21			swap L39/L41/L29/L49/L50/RP16/RP24 for layout	
26	13	2015/03/04	schematic update	swap RP1.3 & RP1.4	
27	15			swap Transformer T2507 pins	
28	19			change L29,L51 from SM070003Y00 to SM070003K00	
29	5	2015/03/05	schematic update	add beema & kabini APU	
30	4	2015/03/06	schematic update	Remove A4@, A6@, E1@, E2@	
31	23	2015/03/07	schematic update	SWAP U3	
32	5	2015/03/10	schematic update	add CZL-L APU	
33	15	2015/03/10		Change L2004 to SH00000RT00	
34	12	2015/03/13	schematic update	Change JEDP1 pin define to follow Z5W1M	
35	1,2	2015/03/18	schematic update	Update Project Name & function block page	
36	13,15,19	2015/04/08	schematic update	remove co-layout footprint for DFB.	
37		2015/04/09	update power circuit to 0409		
38		2015/04/09	Change 0 ohm to 0ohm R-S	Change R3923,R427,R428,R3858,R3925,R124,R125,R1682,R1690,R470,R471,R472,R3879,R1680,R563,R564,R567,R568,R467,R2631 to R-S	
39		2015/04/10		Update PCB PN to Ver1.0 (DA6001FR010)	

Security Classification	Compal Secret Data		Compal Electronics, Inc.
Issued Date	2014/03/27	Deciphered Date 2016/03/27	Title HW-PIR

THIS SHEET OF ENGINEERING DRAWING IS THE PROPRIETARY PROPERTY OF COMPAL ELECTRONICS, INC. AND CONTAINS CONFIDENTIAL AND TRADE SECRET INFORMATION. THIS SHEET MAY NOT BE TRANSFERED FROM THE CUSTODY OF THE COMPETENT DIVISION OF R&D DEPARTMENT EXCEPT AS AUTHORIZED BY COMPAL ELECTRONICS, INC. NEITHER THIS SHEET NOR THE INFORMATION IT CONTAINS MAY BE USED BY OR DISCLOSED TO ANY THIRD PARTY WITHOUT PRIOR WRITTEN CONSENT OF COMPAL ELECTRONICS, INC.

Size C	Document Number B5W1E_LA-D121P		Rev 1.0
Date: Thursday, April 16, 2015	Sheet 33 of 33		