Model Name: GA-H110M-S2H DDR3

rev:1.0

SHEET	TITLE
01	COVER SHEET
02	BOM & PCB MODIFY HISTORY
03	BLOCK DIAGRAM
04	CPU_LGA1151-A
05	CPU_LGA1151-B-DDR3
06	CPU_LGA1151-C
07	CPU_LGA1151-D
08	DDR3 CHANNEL A
09	DDR3 CHANNEL B
10	PCH_CLK BUFFER
11	PCH_DMI,USB,PCIE
12	PCH_MISC
13	PCH SATA,PCIE,SATA_EXPRESS
14	PCH_PWR,GND
15	Dual BIOS
16	ITE 8628 LPC IO
17	HWM
18	FAN CTRL--SIO
19	PCI EXPRESS*16 SLOT
20	PCI EXPRESS*1 SLOT
21	SATA
22	ISL95858_856 PWM
23	ISL95858_856 MOS_VCORE
24	ISL95858_856 MOS_VCCGT
25	VCCSA_VCCIO_VCCPLL
26	RT8237_DDR_VDDQ
27	RT8237_PCH_VCC1_0_PCH

SHEET	TITLE
28	DISCRETE POWER
29	ATX POWER , A_-PROCHOT
30	KB_MS_USB
31	RTD2168 - DP to VGA - IC
32	RTD2168 - DP to VGA - Conn
33	R_USB30
34	R_USB20
35	REALTEK - RTL8111G
36	USB20_LAN CONNECTOR-RTL8111G
37	Realtek ALC887
38	REAR AUDIO JACK
39	F_USB30
40	F_USB20
41	GENSYS GL850S
42	COM , LPT , TPM
43	F_PANEL
44	HDMI
45	DVI
46	EMI/ESD
47	POWER MAP
48	TABLE LIST
49	NTC MAP
50	
51	

Model Name: GA-H110M-S2H DDR3 *rev:1.0*

Component value change history

2015/03/02

Data	Change Item	Reason
2015/09/10	first release	9MH11S2H3-00-10A

Circuit or PCB layout change

DATE	Change Item	Reason
2015/08/06	由H110M-H DD3 rev:0.1修改 1、Add Rear 2USB2.0 2、Add DVI PORT 3、VGA改架高 4、Add USB HUB(GL805) 5、Add COM port Pin header 6、ATX_12V改2X4	9MH11S2H3-00-01
2015/09/10	1、SYS_FAN1修改為SYS_FAN	9MH11S2H3-00-10A

GIGABYTE™

Title: BOM & PCB MODIFY HISTORY

Size: Custom | Document Number: GA-H110M-S2H DDR3 | Rev: 1.0

Date: Monday, September 14, 2015 | Sheet 2 of 49

BLOCK DIAGRAM

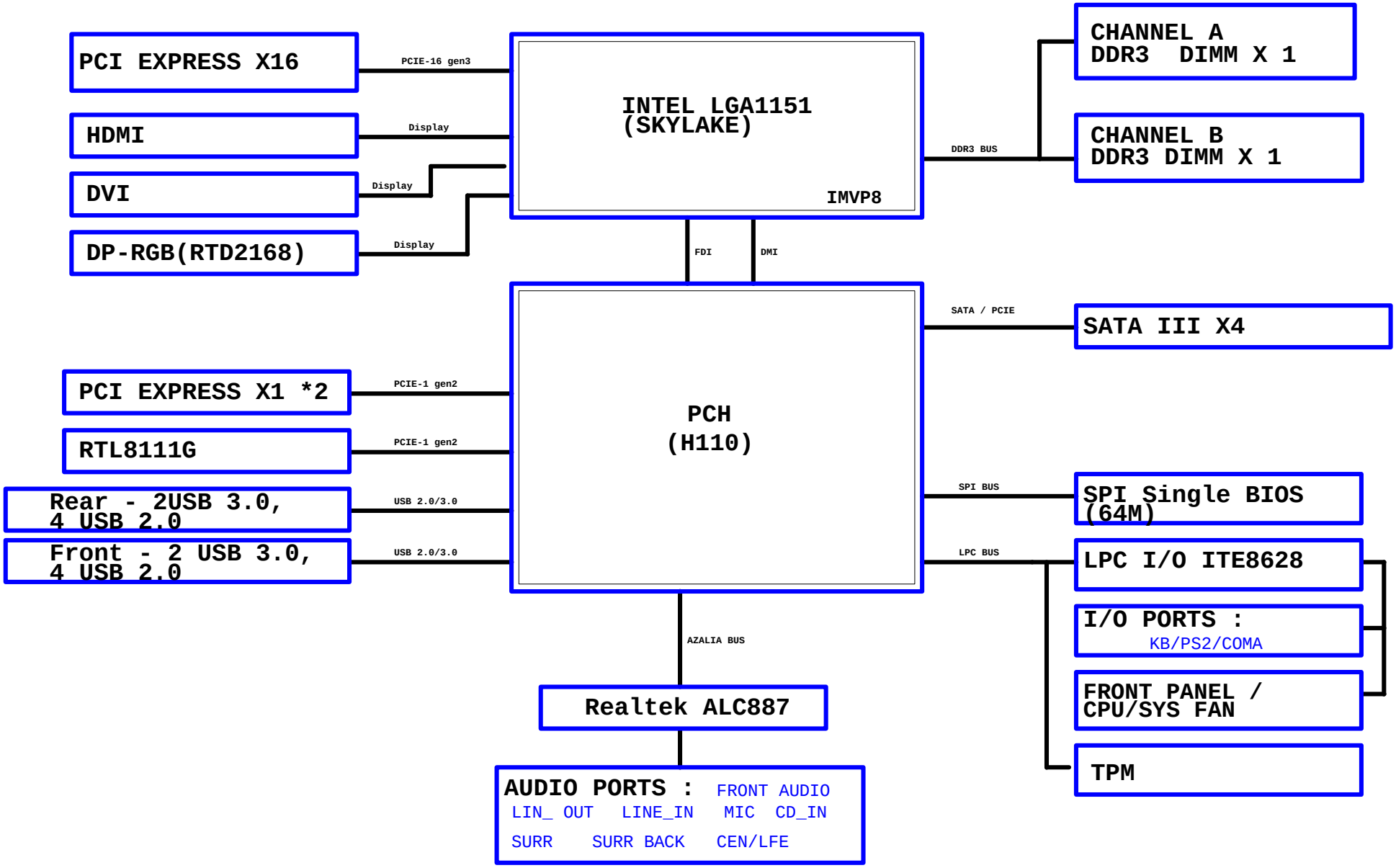

www.schematic-x.blogspot.com

Gigabyte Technology		
Title	BLOCK DIAGRAM	
Size C	Document Number GA-H110M-S2H DDR3	Rev 1.0
Date: Monday, September 14, 2015	Sheet 3 of 49	

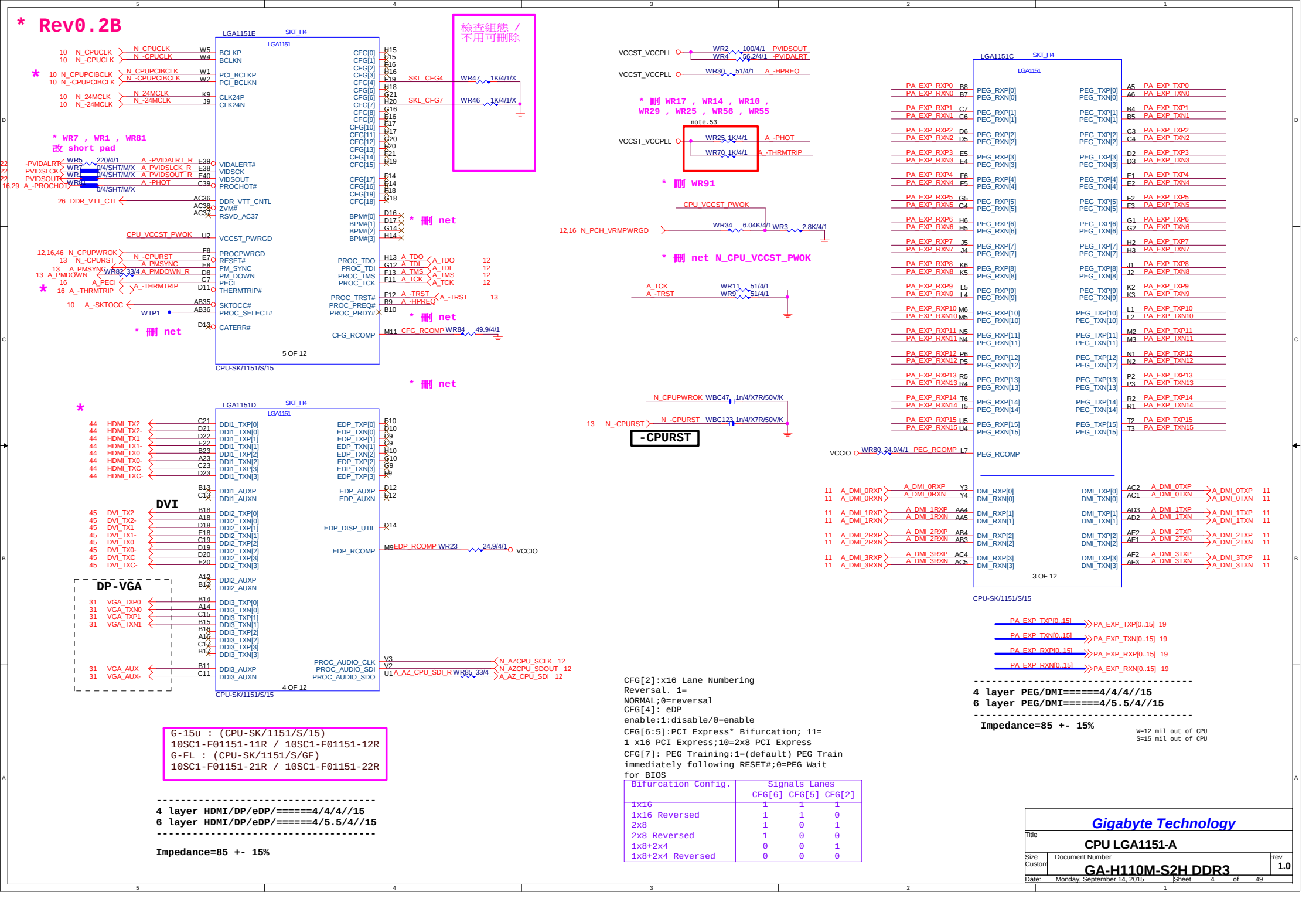
* Rev0.2B
LGA1151E SKT_H4
LGA1151
檢查組態 / 不用可刪除
* WR7 , WR1 , WR81 改 short pad
* 刪 WR17 , WR14 , WR10 , WR29 , WR25 , WR56 , WR55
note.53
* 刪 WR91
* 刪 net N_CPU_VCCST_PWOK
* 刪 net
5 OF 12
CPU-SK/1151/S/15
LGA1151D SKT_H4
DVI
DP-VGA
4 OF 12
LGA1151C SKT_H4
-CPURST
3 OF 12
G-15u : (CPU-SK/1151/S/15)
10SC1-F01151-11R / 10SC1-F01151-12R
G-FL : (CPU-SK/1151/S/GF)
10SC1-F01151-21R / 10SC1-F01151-22R
4 layer HDMI/DP/eDP/======4/4/4//15
6 layer HDMI/DP/eDP/======4/5.5/4//15
Impedance=85 +- 15%
CFG[2]:x16 Lane Numbering Reversal. 1= NORMAL;0=reversal
CFG[4]: eDP enable:1:disable/0=enable
CFG[6:5]:PCI Express* Bifurcation; 11= 1 x16 PCI Express;10=2x8 PCI Express
CFG[7]: PEG Training:1=(default) PEG Train immediately following RESET#;0=PEG Wait for BIOS
Bifurcation Config. | Signals Lanes CFG[6] CFG[5] CFG[2]
1x16 | 1 1 1
1x16 Reversed | 1 1 0
2x8 | 1 0 1
2x8 Reversed | 1 0 0
1x8+2x4 | 0 0 1
1x8+2x4 Reversed | 0 0 0
4 layer PEG/DMI======4/4/4//15
6 layer PEG/DMI======4/5.5/4//15
Impedance=85 +- 15%
W=12 mil out of CPU
S=15 mil out of CPU
Gigabyte Technology
Title
CPU LGA1151-A
Size Custom
Document Number
GA-H110M-S2H DDR3
Rev 1.0
Date: Monday, September 14, 2015
Sheet 4 of 49

* 改DDR4 net

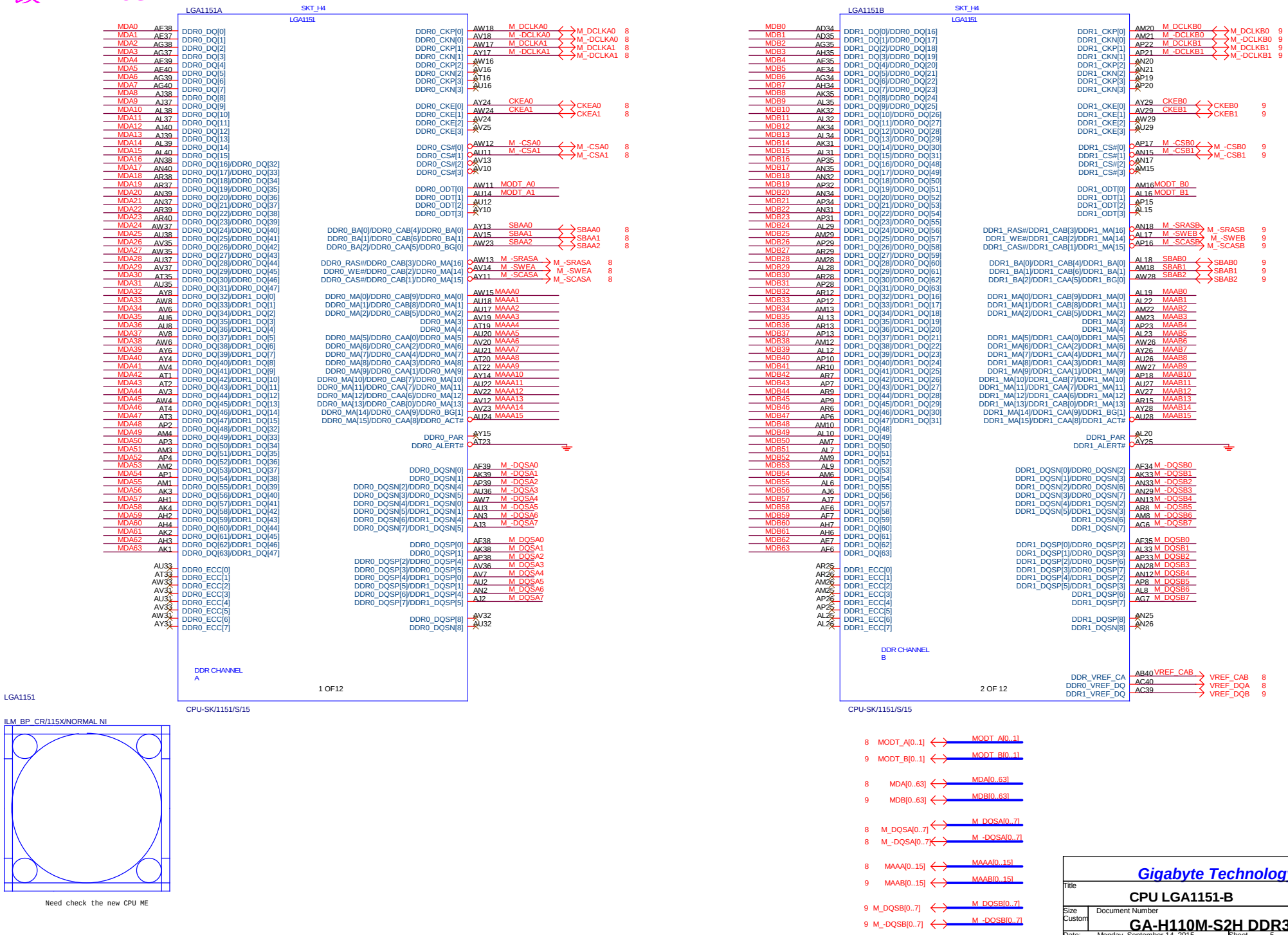

Gigabyte Technology	
Title	CPU LGA1151-B
Size Custom	Document Number GA-H110M-S2H DDR3 Rev 1.0
Date: Monday, September 14, 2015	Sheet 5 of 49

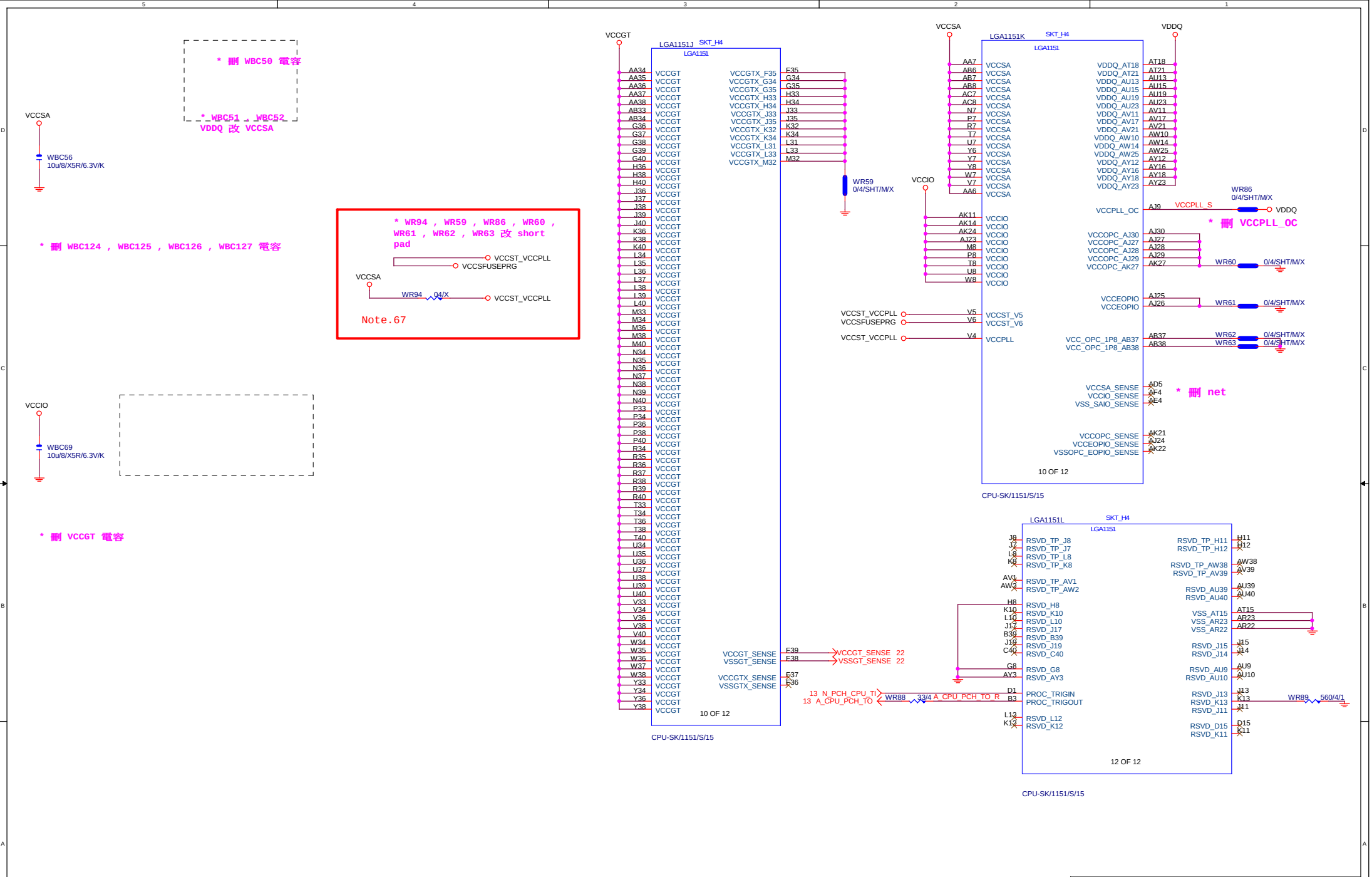

Gigabyte Technology		
Title	CPU LGA1151-C	
Size Custom	Document Number GA-H110M-S2H DDR3	Rev 1.0
Date: Monday, September 14, 2015	Sheet 6 of 49	

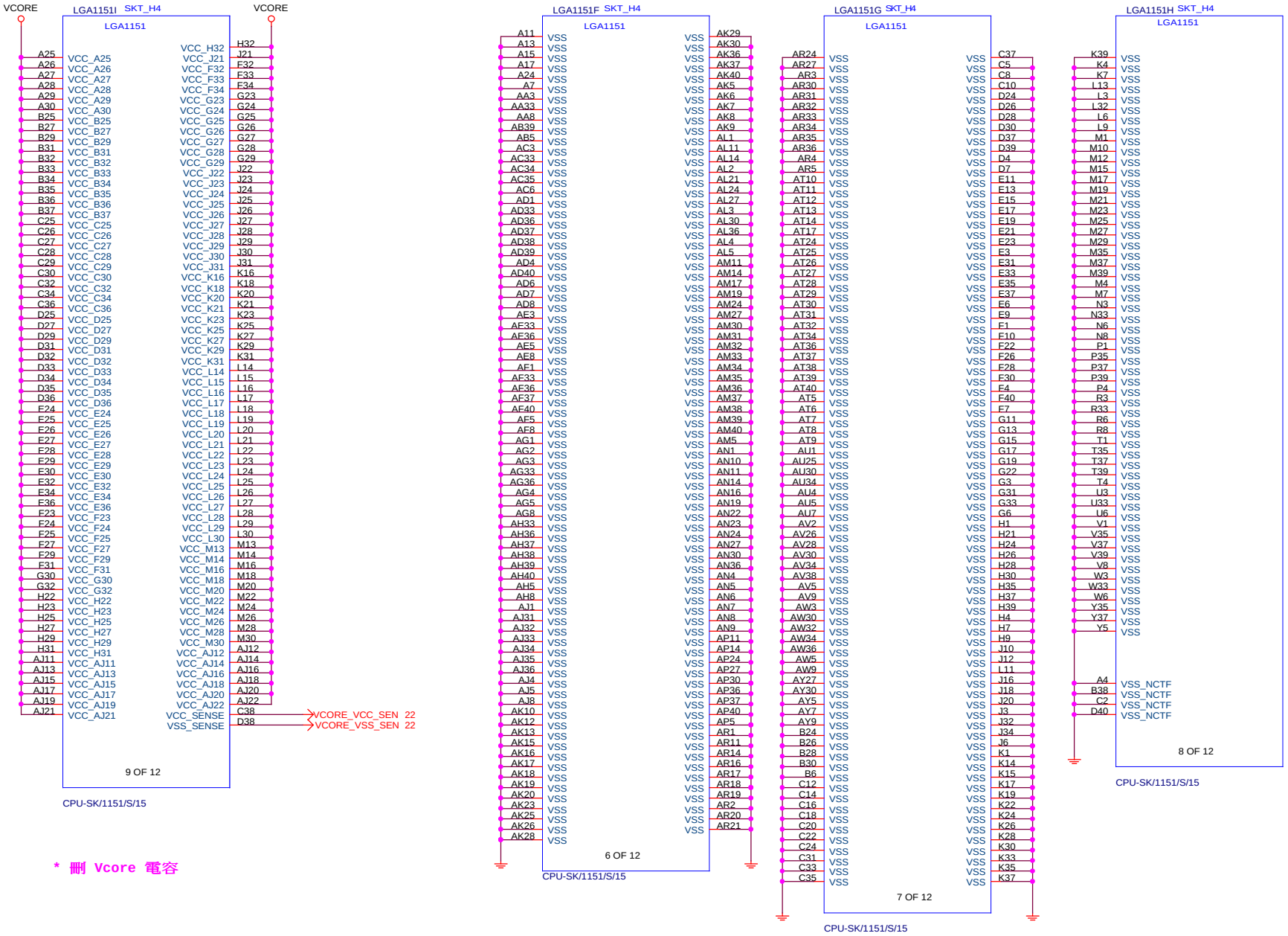

* 刪 Vcore 電容

Gigabyte Technology		
Title: CPU LGA1151-C		
Size: Custom	Document Number: GA-H110M-S2H DDR3	Rev: 1.0
Date: Monday, September 14, 2015	Sheet 7 of 49	

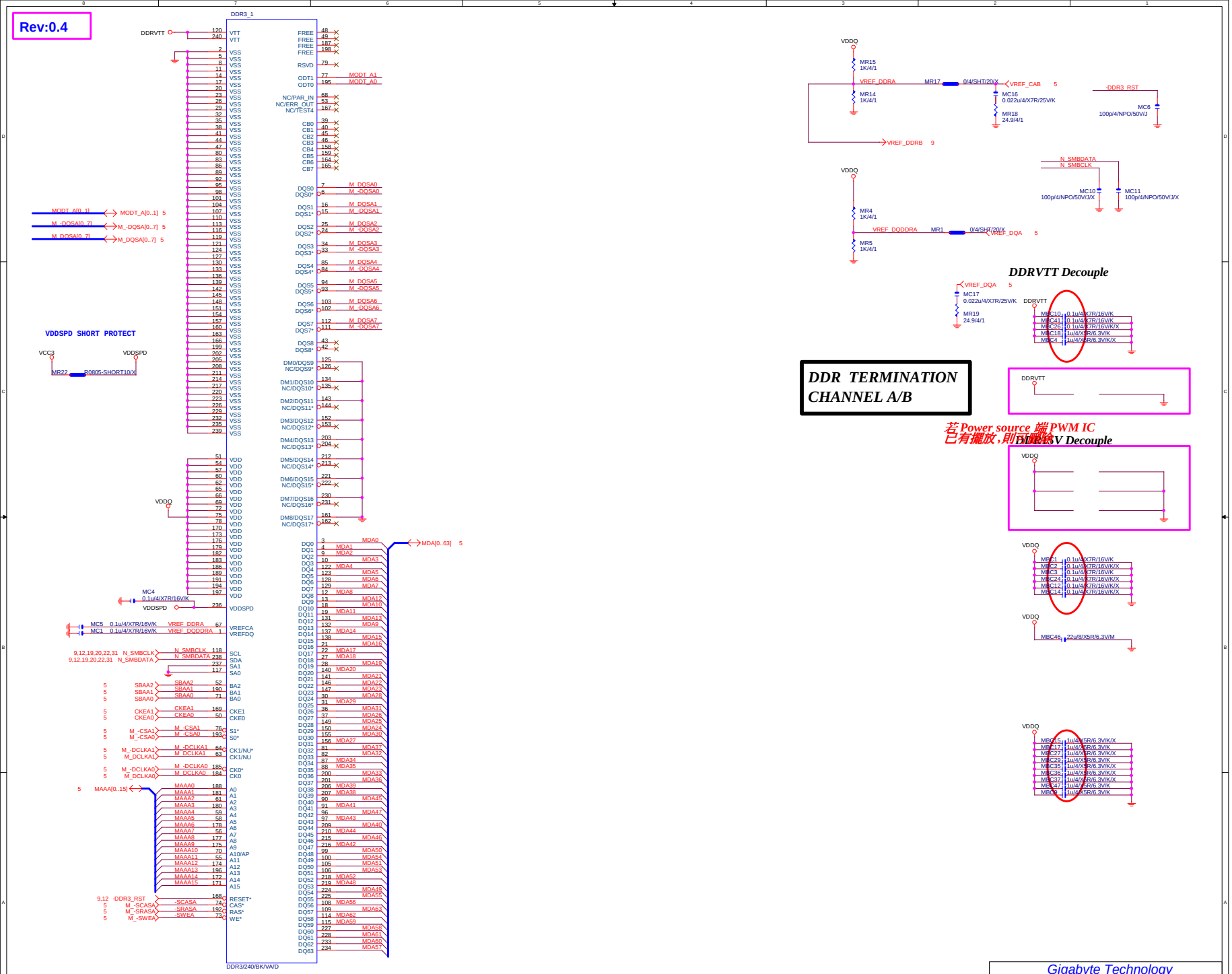

Gigabyte Technology

Title: DDR4 CHANNEL A

Size: Custom | Document Number: GA-H110M-S2H DDR3 | Rev: 1.0

Date: | Sheet 8 of 49

Rev:0.4

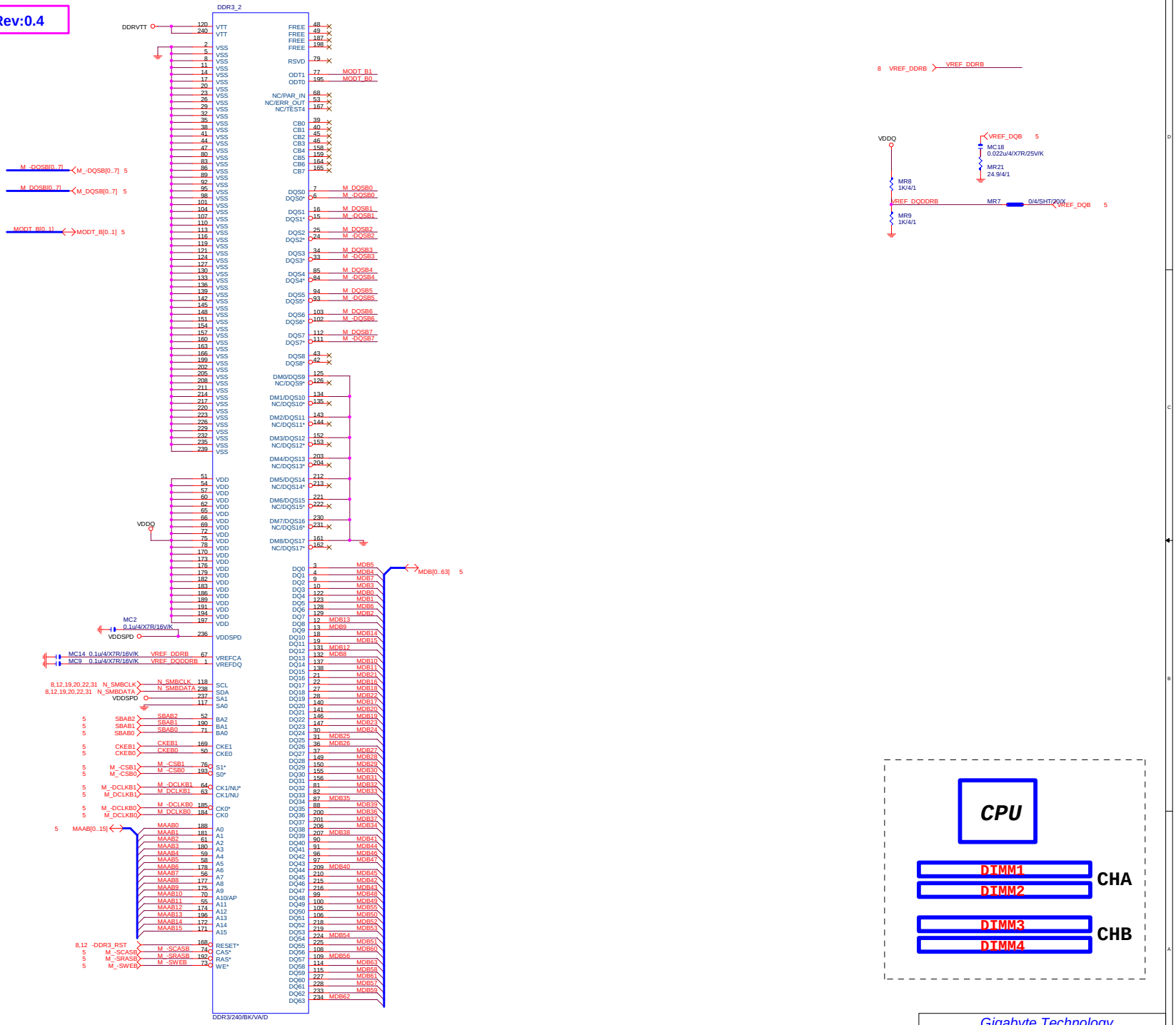

黑色

Gigabyte Technology

Title: DDR4 CHANNEL B

Size: Custom | Document Number: GA-H110M-S2H DDR3 | Rev: 1.0

Date: | Sheet 9 of 49

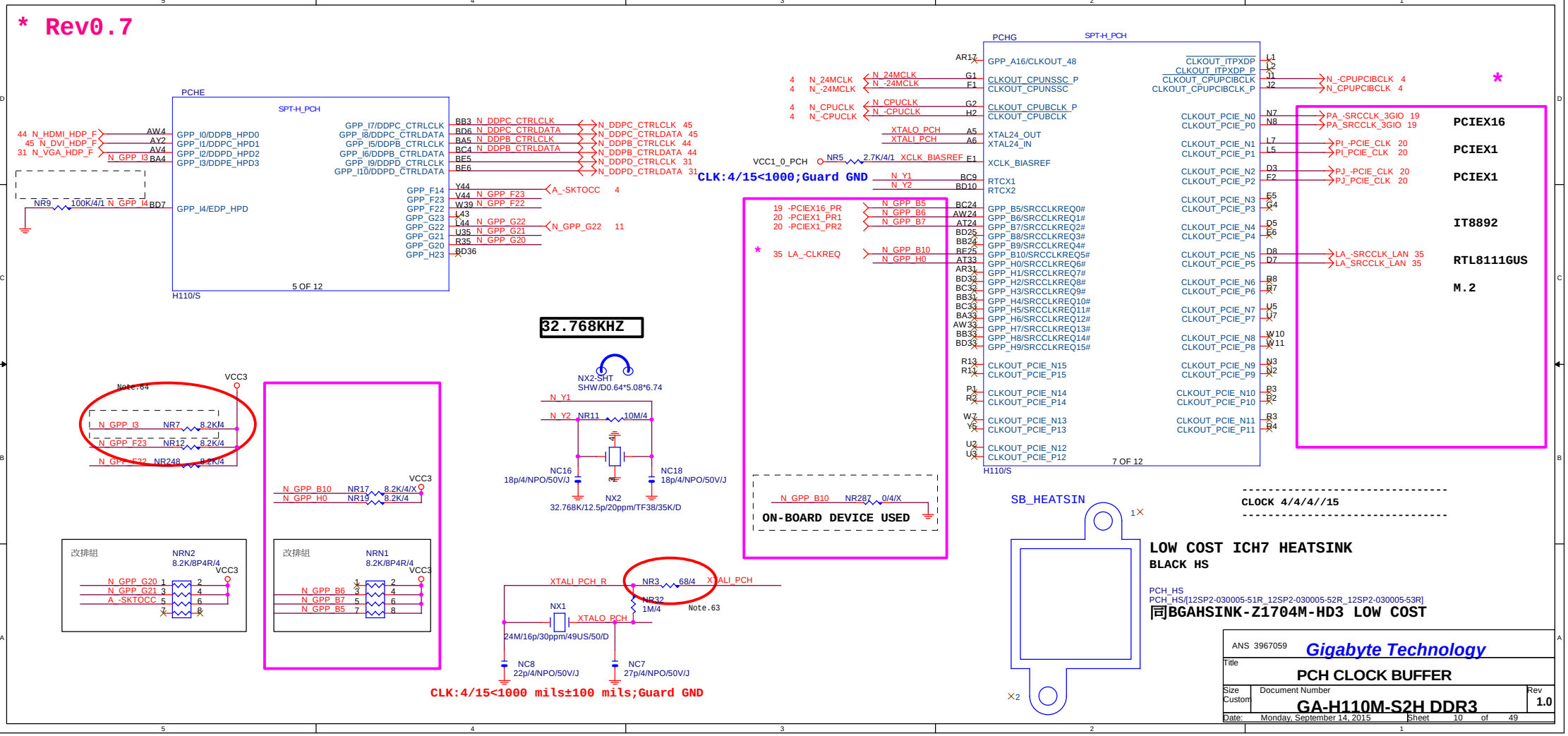
* Rev0.7
PCHE
SPT-H_PCH
5 OF 12
H110/S
44 N_HDMI_HDP_F
45 N_DVI_HDP_F
31 N_VGA_HDP_F
N_GPP_I3
NR9 100K/4/1 N_GPP_I4
GPP_I0/DDPB_HPD0
GPP_I1/DDPC_HPD1
GPP_I2/DDPD_HPD2
GPP_I3/DDPE_HPD3
GPP_I4/EDP_HPD
GPP_I7/DDPC_CTRLCLK
GPP_I8/DDPC_CTRLDATA
GPP_I5/DDPB_CTRLCLK
GPP_I6/DDPB_CTRLDATA
GPP_I9/DDPD_CTRLCLK
GPP_I10/DDPD_CTRLDATA
N_DDPC_CTRLCLK 45
N_DDPC_CTRLDATA 45
N_DDPB_CTRLCLK 44
N_DDPB_CTRLDATA 44
N_DDPD_CTRLCLK 31
N_DDPD_CTRLDATA 31
GPP_F14
GPP_F23
GPP_F22
GPP_G23
GPP_G22
GPP_G21
GPP_G20
GPP_H23
N_GPP_F23
N_GPP_F22
N_GPP_G22
N_GPP_G21
N_GPP_G20
A_-SKTOCC 4
N_GPP_G22 11
CLK:4/15<1000;Guard GND
PCHG
SPT-H_PCH
7 OF 12
H110/S
4 N_24MCLK
4 N_-24MCLK
4 N_CPUCLK
4 N_-CPUCLK
XTALO_PCH
XTALI_PCH
VCC1_0_PCH NR5 2.7K/4/1 XCLK_BIASREF
N_Y1
N_Y2
19 -PCIEX16_PR
20 -PCIEX1_PR1
20 -PCIEX1_PR2
N_GPP_B5
N_GPP_B6
N_GPP_B7
* 35 LA_-CLKREQ
N_GPP_B10
N_GPP_H0
N_GPP_B10 NR287 0/4/X
ON-BOARD DEVICE USED
N_-CPUPCIBCLK 4
N_CPUPCIBCLK 4
PA_-SRCCLK_3GIO 19
PA_SRCCLK_3GIO 19
PI_-PCIE_CLK 20
PI_PCIE_CLK 20
PJ_-PCIE_CLK 20
PJ_PCIE_CLK 20
LA_-SRCCLK_LAN 35
LA_SRCCLK_LAN 35
PCIEX16
PCIEX1
PCIEX1
IT8892
RTL8111GUS
M.2
32.768KHZ
NX2-SHT
SHW/D0.64*5.08*6.74
N_Y1
N_Y2 NR11 10M/4
NC16
18p/4/NPO/50V/J
NC18
18p/4/NPO/50V/J
NX2
32.768K/12.5p/20ppm/TF38/35K/D
Note.84
VCC3
N_GPP_I3 NR7 8.2K/4
N_GPP_F23 NR12 8.2K/4
N_GPP_F22 NR248 8.2K/4
N_GPP_B10 NR17 8.2K/4/X
N_GPP_H0 NR19 8.2K/4
改排組
NRN2
8.2K/8P4R/4
N_GPP_G20
N_GPP_G21
A_-SKTOCC
改排組
NRN1
8.2K/8P4R/4
N_GPP_B6
N_GPP_B7
N_GPP_B5
XTALI_PCH_R
NR3 68/4
XTALI_PCH
NR32
1M/4
Note.63
NX1
XTALO_PCH
24M/16p/30ppm/49US/50/D
NC8
22p/4/NPO/50V/J
NC7
27p/4/NPO/50V/J
CLK:4/15<1000 mils±100 mils;Guard GND
SB_HEATSIN
CLOCK 4/4/4//15
LOW COST ICH7 HEATSINK
BLACK HS
PCH_HS
PCH_HS/[12SP2-030005-51R_12SP2-030005-52R_12SP2-030005-53R]
同BGAHSINK-Z1704M-HD3 LOW COST
ANS 3967059
Gigabyte Technology
Title
PCH CLOCK BUFFER
Size Custom
Document Number
GA-H110M-S2H DDR3
Rev 1.0
Date: Monday, September 14, 2015
Sheet 10 of 49

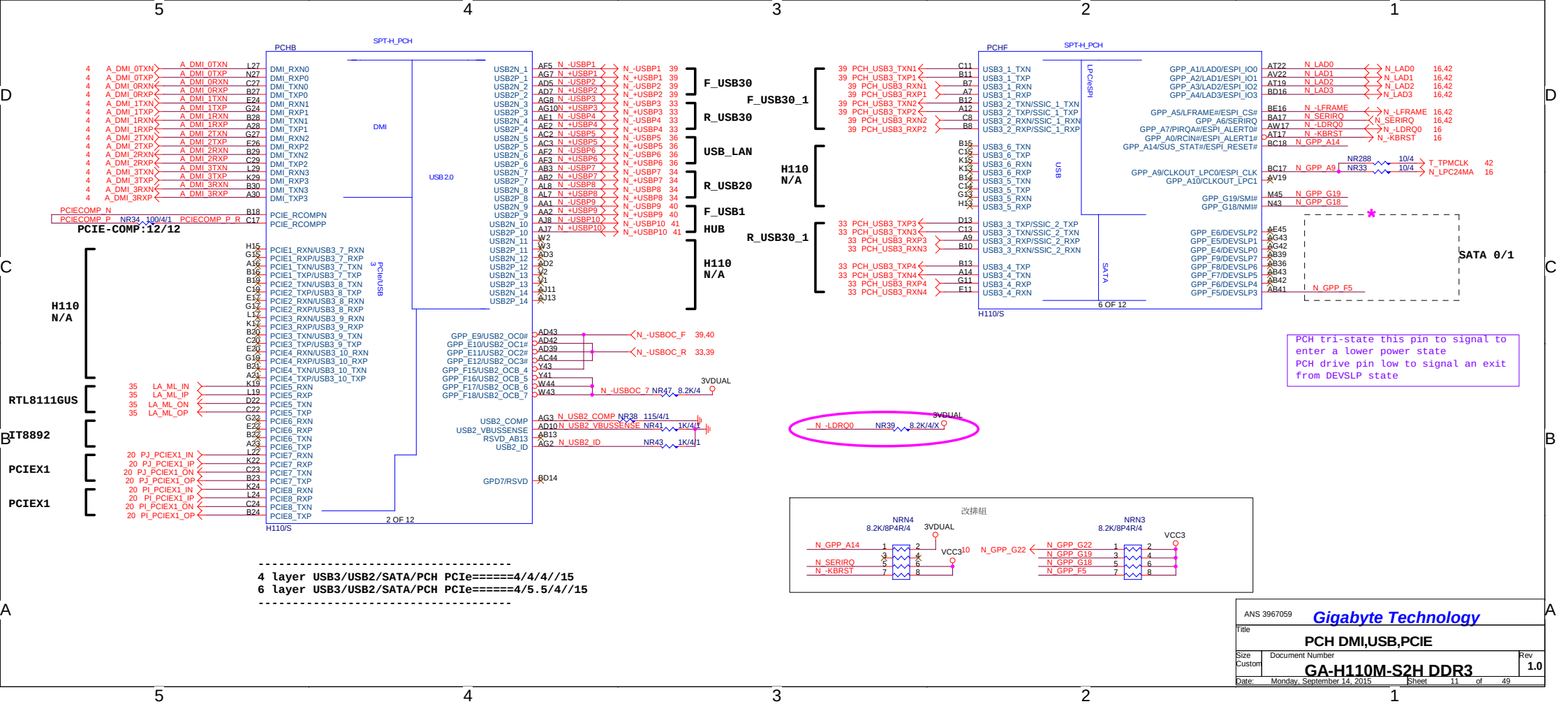

ANS 3967059

Gigabyte Technology

Title: PCH DMI,USB,PCIE

Size: Custom | Document Number: GA-H110M-S2H DDR3 | Rev: 1.0

Date: Monday, September 14, 2015 | Sheet 11 of 49

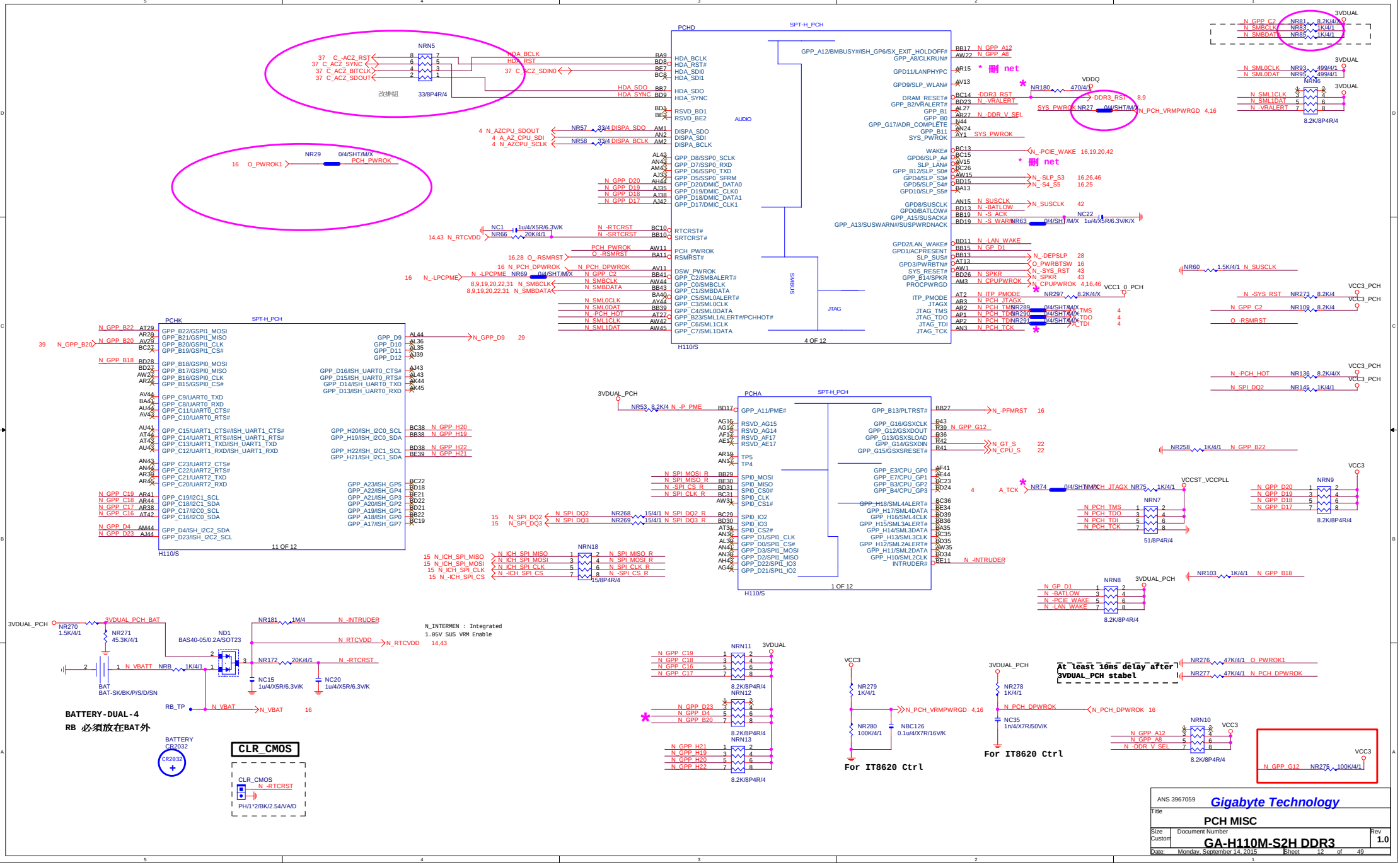
PCHD
SPT-H_PCH
H110/S
4 OF 12
AUDIO
SMBUS
JTAG
PCHK
11 OF 12
PCHA
1 OF 12
NRN5
33/8P4R/4
改排組
NRN6
8.2K/8P4R/4
NRN7
51/8P4R/4
NRN8
NRN9
NRN10
NRN11
NRN12
NRN13
NRN18
15/8P4R/4
ND1
BAS40-05/0.2ASOT23
BAT
BAT-SK/BK/P/S/D/SN
BATTERY
CR2032
CLR_CMOS
PH/1*2/BK/2.54/VA/D
BATTERY-DUAL-4
RB 必須放在BAT外
N_INTERMEN : Integrated
1.05V SUS VRM Enable
For IT8620 Ctrl
At least 10ms delay after
3VDUAL_PCH stabel
ANS 3967059
Gigabyte Technology
Title
PCH MISC
Size Custom
Document Number
GA-H110M-S2H DDR3
Rev 1.0
Date: Monday, September 14, 2015
Sheet 12 of 49

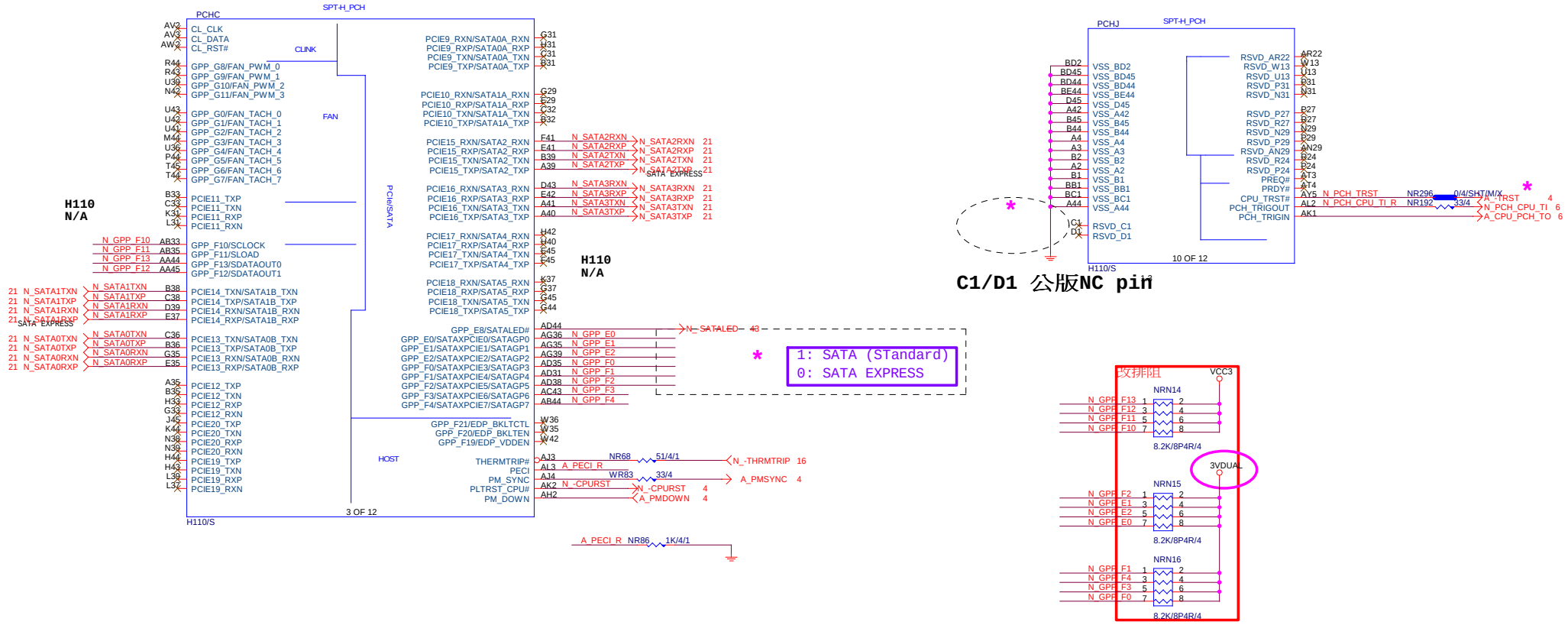

ANS 3967059

Gigabyte Technology

Title: **PCH SATA,PCIE,SATA_EXPRESS**

Size: Custom | Document Number: **GA-H110M-S2H DDR3** | Rev: **1.0**

Date: Monday, September 14, 2015 | Sheet 13 of 49

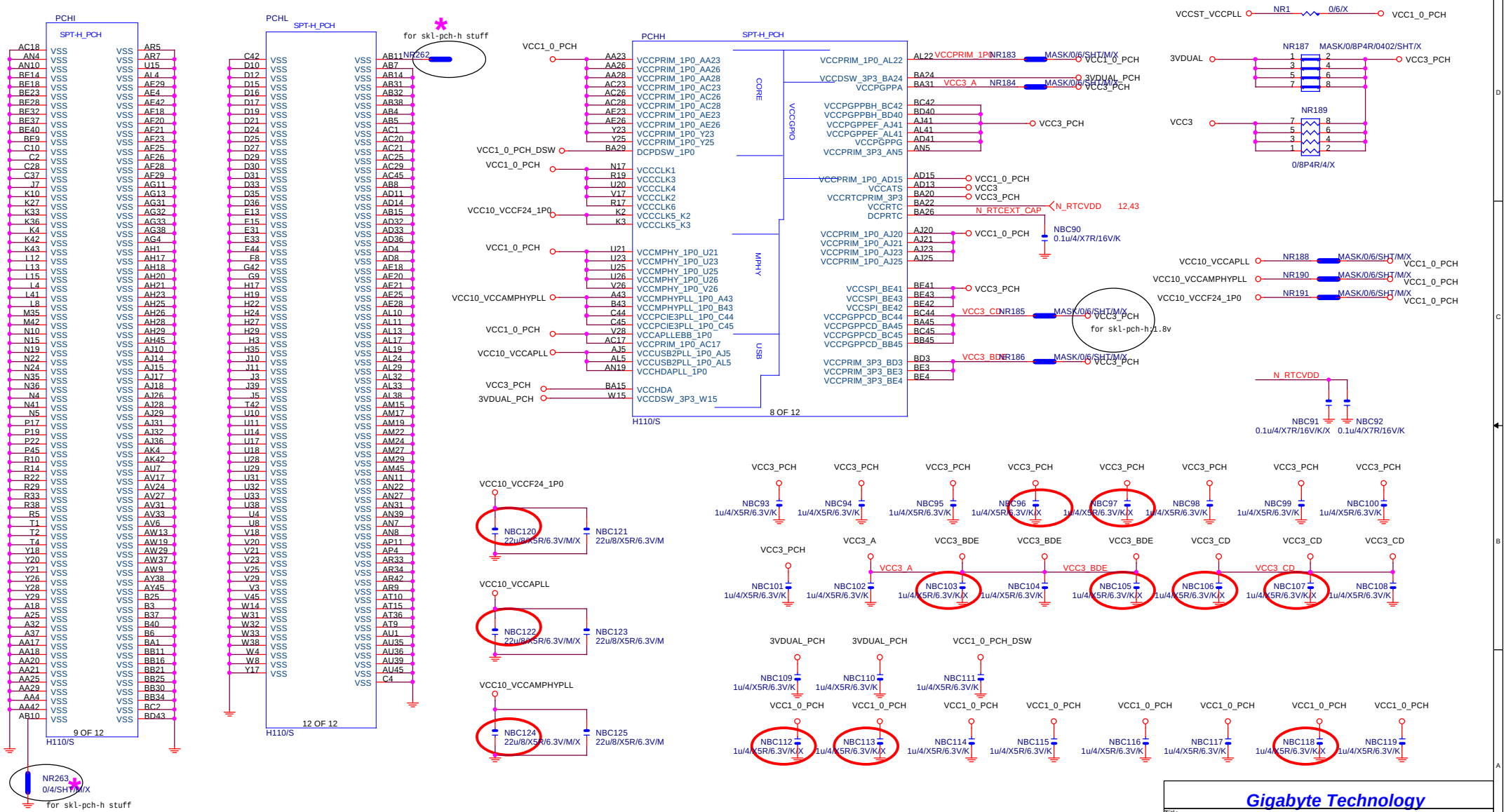
PCHI
SPT-H_PCH
9 OF 12
H110/S
NR263
0/4/SHT/M/X
for skl-pch-h stuff
PCHL
SPT-H_PCH
12 OF 12
H110/S
NR262
for skl-pch-h stuff
PCHH
SPT-H_PCH
CORE
VCCGPIO
MPHY
USB
8 OF 12
H110/S
VCCST_VCCPLL
NR1
0/6/X
VCC1_0_PCH
3VDUAL
NR187
MASK/0/8P4R/0402/SHT/X
VCC3_PCH
VCC3
NR189
0/8P4R/4/X
VCC10_VCCAPLL
NR188
MASK/0/6/SHT/M/X
VCC10_VCCAMPHYPLL
NR190
VCC10_VCCF24_1P0
NR191
NR183
NR184
NR185
NR186
VCC3_A
VCC3_CD
VCC3_BDE
N_RTCVDD
12,43
N_RTCEXT_CAP
NBC90
0.1u/4/X7R/16V/K
for skl-pch-h:1.8v
NBC91
0.1u/4/X7R/16V/K/X
NBC92
0.1u/4/X7R/16V/K
VCC3_PCH
NBC93
NBC94
NBC95
NBC96
NBC97
NBC98
NBC99
NBC100
1u/4/X5R/6.3V/K
NBC101
NBC102
NBC103
NBC104
NBC105
NBC106
NBC107
NBC108
NBC109
NBC110
NBC111
3VDUAL_PCH
VCC1_0_PCH_DSW
NBC112
NBC113
NBC114
NBC115
NBC116
NBC117
NBC118
NBC119
NBC120
22u/8/X5R/6.3V/M/X
NBC121
22u/8/X5R/6.3V/M
NBC122
NBC123
NBC124
NBC125
Gigabyte Technology
Title
PCH PWR, GND
Size
Custom
Document Number
GA-H110M-S2H DDR3
Rev
1.0
Date: Monday, September 14, 2015
Sheet 14 of 49

Rev 0.1

BIOS

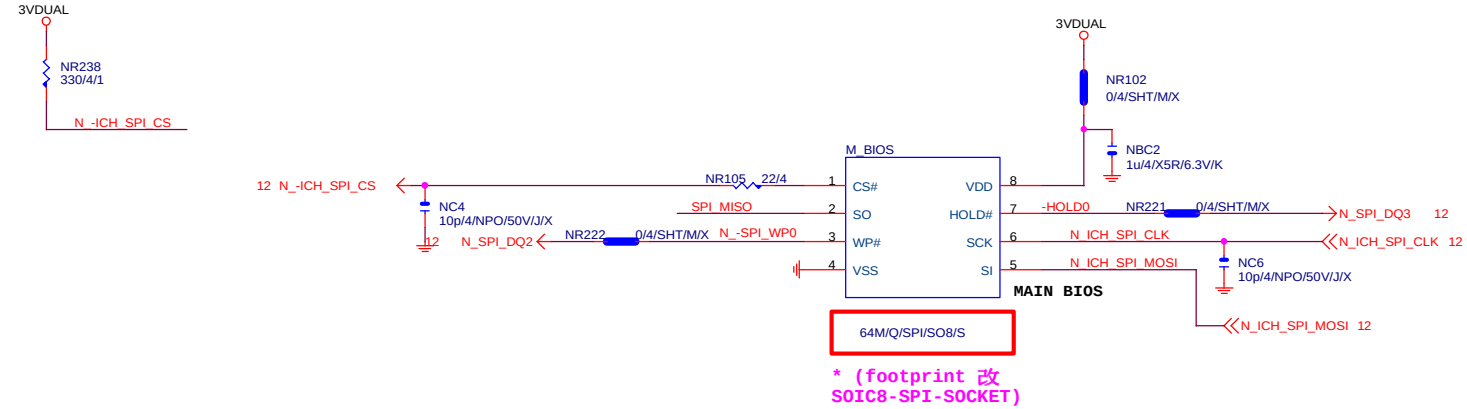

* (footprint 改 SOIC8-SPI-SOCKET)

MOSI For DMI RX Termination Voltage

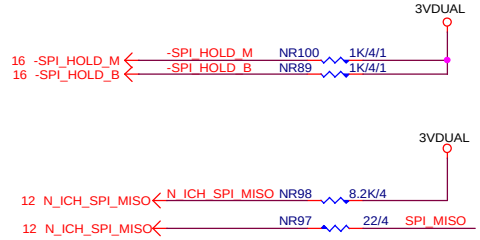

BOOT DEVICE	GNT0	GNT1
LPC	0	0
PCI	0	1
NAND	1	0
SPI	1	1

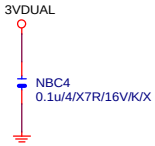

1 means floating
0 means PD 1K

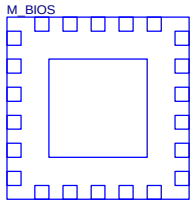

LCP/G-FL/1.27mm/200MIL/WHITE[10SL2-000008-31R]/X

* 試產先上 , PVT 移除

BIOS_PH

Gigabyte Technology		
Title: BIOS		
Size: Custom	Document Number: GA-H110M-S2H DDR3	Rev: 1.0
Date: Monday, September 14, 2015	Sheet 15 of 49	

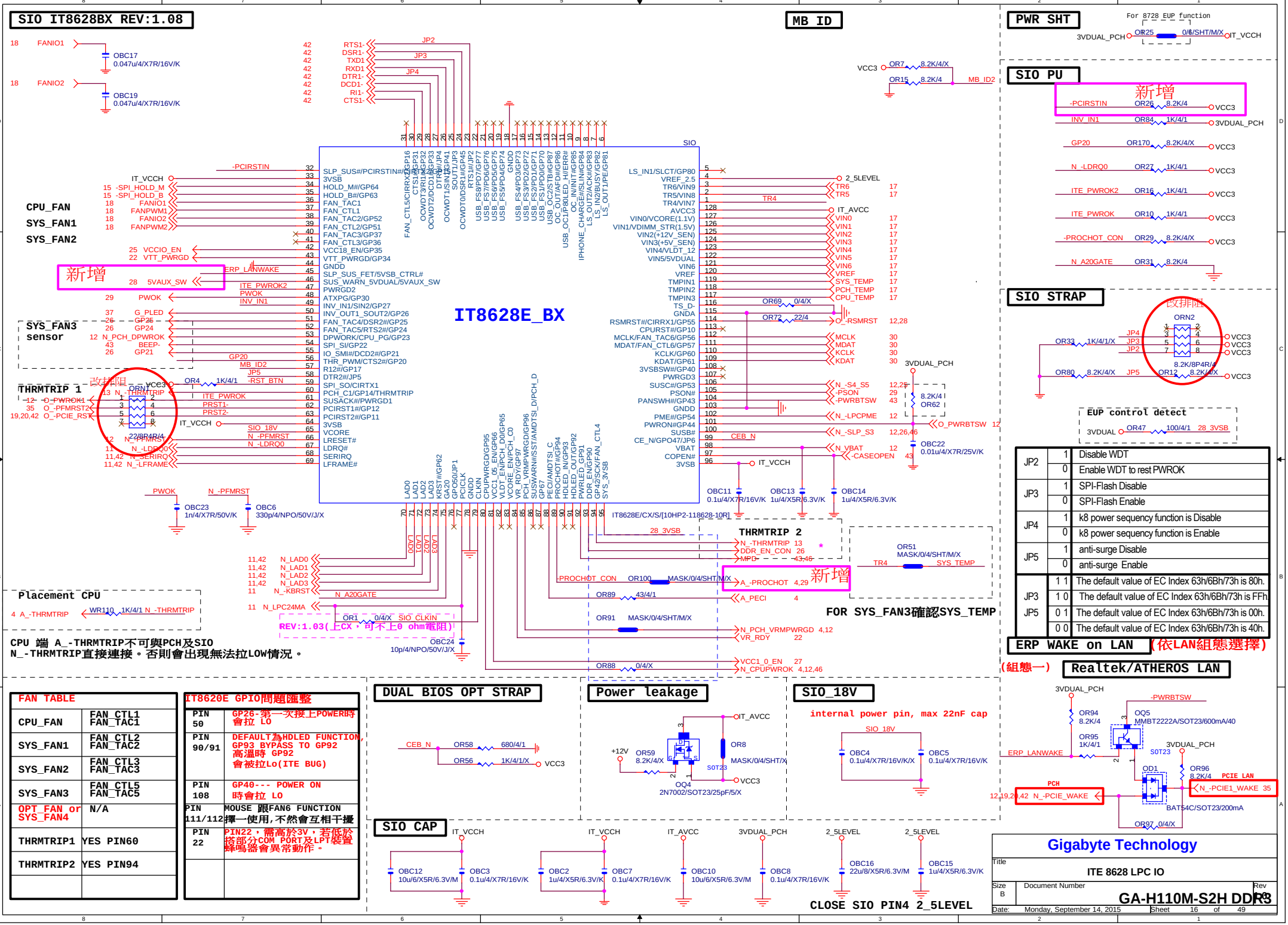

FAN TABLE	
CPU_FAN	FAN_CTL1 FAN_TAC1
SYS_FAN1	FAN_CTL2 FAN_TAC2
SYS_FAN2	FAN_CTL3 FAN_TAC3
SYS_FAN3	FAN_CTL5 FAN_TAC5
OPT_FAN or SYS_FAN4	N/A
THRMTRIP1	YES PIN60
THRMTRIP2	YES PIN94

IT8620E GPIO問題匯整	
PIN 50	GP26-第一次接上POWER時會拉 LO
PIN 90/91	DEFAULT為HDLED FUNCTION, GP93 BYPASS TO GP92 高溫時 GP92 會被拉Lo(ITE BUG)
PIN 108	GP40--- POWER ON 時會拉 LO
PIN 111/112	MOUSE 跟FAN6 FUNCTION 擇一使用,不然會互相干擾
PIN 22	PIN22，需高於3V，若低於搭部分COM PORT及LPT裝置蜂鳴器會異常動作。

JP2	1	Disable WDT
	0	Enable WDT to rest PWROK
JP3	1	SPI-Flash Disable
	0	SPI-Flash Enable
JP4	1	k8 power sequency function is Disable
	0	k8 power sequency function is Enable
JP5	1	anti-surge Disable
	0	anti-surge Enable
JP3 JP5	1 1	The default value of EC Index 63h/6Bh/73h is 80h.
	1 0	The default value of EC Index 63h/6Bh/73h is FFh
	0 1	The default value of EC Index 63h/6Bh/73h is 00h.
	0 0	The default value of EC Index 63h/6Bh/73h is 40h.

TEMP H/W MONITOR REV 1.08

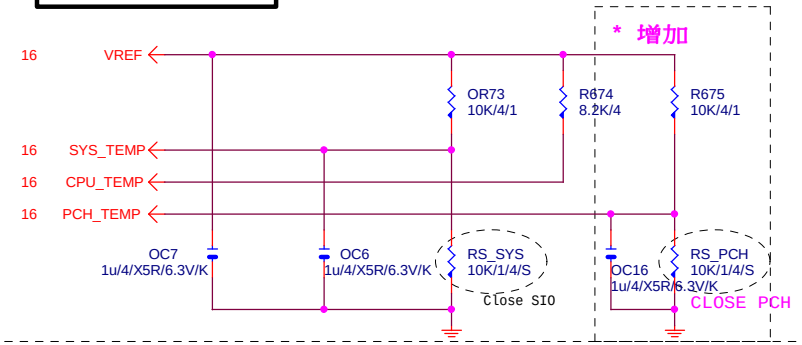

RS_VCORE、RS_VCCGT CLOSE CPU VCORE & VCCGT MOSFET

-PROCHOT:有mos heartsink不用prochot function

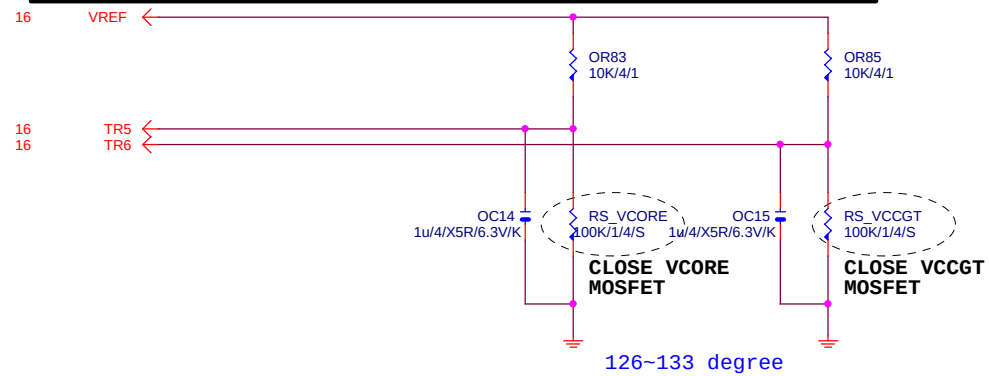

VOLTAGE-- H/W MONITOR

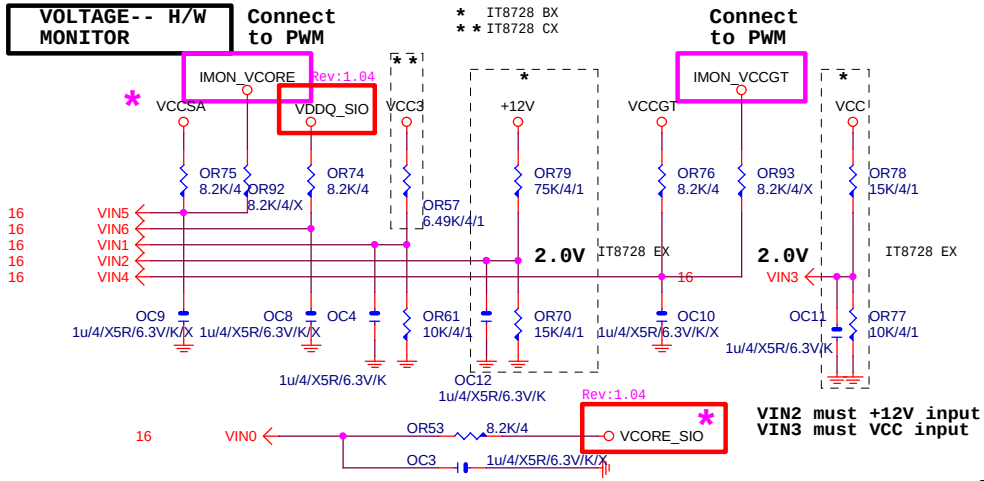

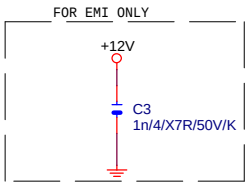

The division voltage of VIN2 & VIN3 must be around 2.9V

Gigabyte Technology		
Title: HWM,KB/MS, FAN CTRL		
Size: Custom	Document Number: GA-H110M-S2H DDR3	Rev: 1.0
Date: Monday, September 14, 2015	Sheet 17 of 49	

CPU SMART FAN

Rev: 0.7

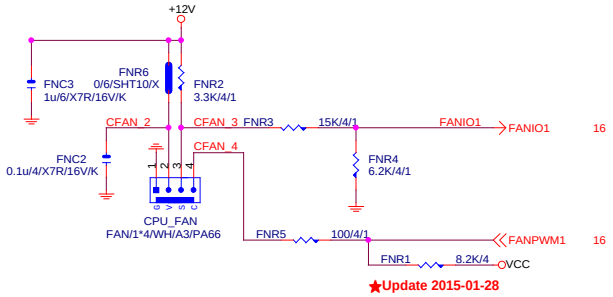

★Update 2015-01-28

SYSTEM FAN1

A.

Linear SYS_FAN

Enable Function (NCT3941S)
Full Turn On Function (NCT3941S-A)

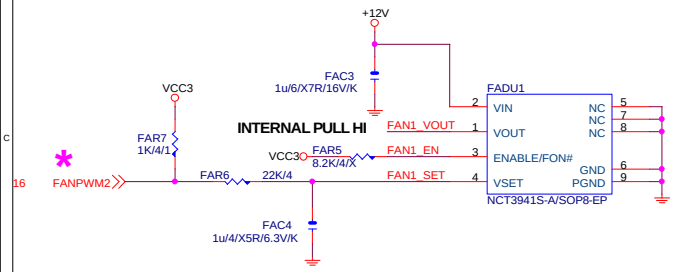

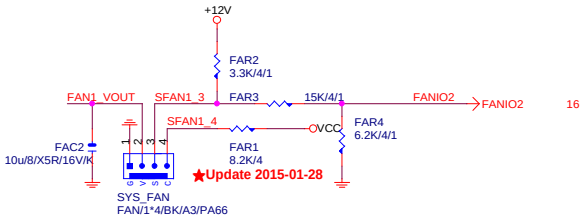

★Update 2015-01-28

Gigabyte Technology		
Title: FAN CTRL		
Size: Custom	Document Number: GA-H110M-S2H DDR3	Rev: 1.0
Date: Monday, September 14, 2015	Sheet 18 of 49	

Rev 0.2

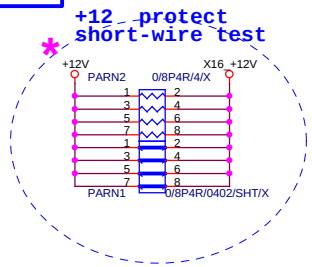

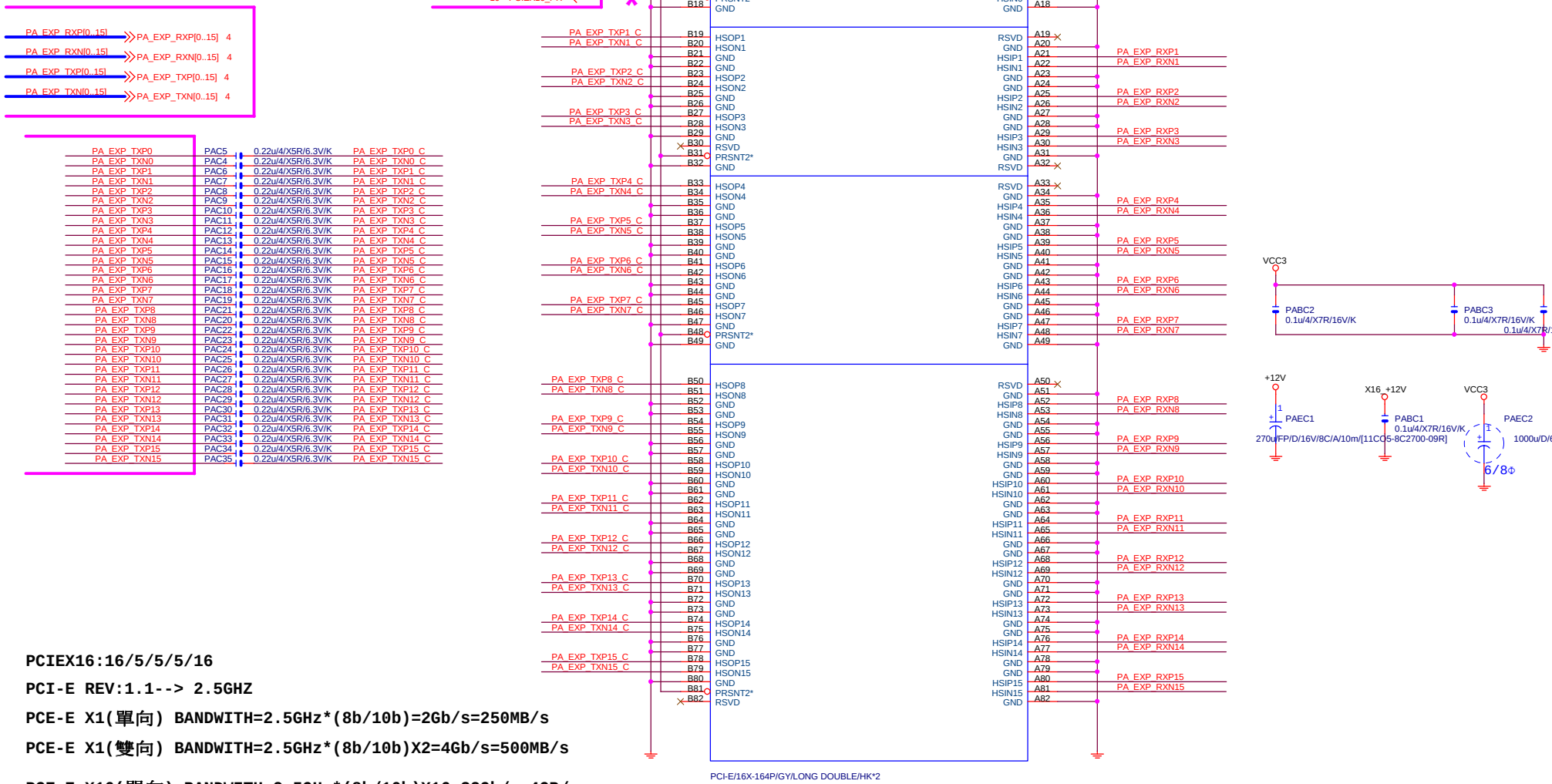

PCIEX16:16/5/5/5/16

PCI-E REV:1.1--> 2.5GHZ

PCE-E X1(單向) BANDWITH=2.5GHz*(8b/10b)=2Gb/s=250MB/s

PCE-E X1(雙向) BANDWITH=2.5GHz*(8b/10b)X2=4Gb/s=500MB/s

PCE-E X16(單向) BANDWITH=2.5GHz*(8b/10b)X16=32Gb/s=4GB/s

PCE-E X16(雙向) BANDWITH=2.5GHz*(8b/10b)X16X2=64Gb/s=8GB/s

PCI-E REV:2.0--> 5GHZ

PA_EXP_TXP0	PAC5	0.22u/4/X5R/6.3V/K	PA_EXP_TXP0_C
PA_EXP_TXN0	PAC4	0.22u/4/X5R/6.3V/K	PA_EXP_TXN0_C
PA_EXP_TXP1	PAC6	0.22u/4/X5R/6.3V/K	PA_EXP_TXP1_C
PA_EXP_TXN1	PAC7	0.22u/4/X5R/6.3V/K	PA_EXP_TXN1_C
PA_EXP_TXP2	PAC8	0.22u/4/X5R/6.3V/K	PA_EXP_TXP2_C
PA_EXP_TXN2	PAC9	0.22u/4/X5R/6.3V/K	PA_EXP_TXN2_C
PA_EXP_TXP3	PAC10	0.22u/4/X5R/6.3V/K	PA_EXP_TXP3_C
PA_EXP_TXN3	PAC11	0.22u/4/X5R/6.3V/K	PA_EXP_TXN3_C
PA_EXP_TXP4	PAC12	0.22u/4/X5R/6.3V/K	PA_EXP_TXP4_C
PA_EXP_TXN4	PAC13	0.22u/4/X5R/6.3V/K	PA_EXP_TXN4_C
PA_EXP_TXP5	PAC14	0.22u/4/X5R/6.3V/K	PA_EXP_TXP5_C
PA_EXP_TXN5	PAC15	0.22u/4/X5R/6.3V/K	PA_EXP_TXN5_C
PA_EXP_TXP6	PAC16	0.22u/4/X5R/6.3V/K	PA_EXP_TXP6_C
PA_EXP_TXN6	PAC17	0.22u/4/X5R/6.3V/K	PA_EXP_TXN6_C
PA_EXP_TXP7	PAC18	0.22u/4/X5R/6.3V/K	PA_EXP_TXP7_C
PA_EXP_TXN7	PAC19	0.22u/4/X5R/6.3V/K	PA_EXP_TXN7_C
PA_EXP_TXP8	PAC21	0.22u/4/X5R/6.3V/K	PA_EXP_TXP8_C
PA_EXP_TXN8	PAC20	0.22u/4/X5R/6.3V/K	PA_EXP_TXN8_C
PA_EXP_TXP9	PAC22	0.22u/4/X5R/6.3V/K	PA_EXP_TXP9_C
PA_EXP_TXN9	PAC23	0.22u/4/X5R/6.3V/K	PA_EXP_TXN9_C
PA_EXP_TXP10	PAC24	0.22u/4/X5R/6.3V/K	PA_EXP_TXP10_C
PA_EXP_TXN10	PAC25	0.22u/4/X5R/6.3V/K	PA_EXP_TXN10_C
PA_EXP_TXP11	PAC26	0.22u/4/X5R/6.3V/K	PA_EXP_TXP11_C
PA_EXP_TXN11	PAC27	0.22u/4/X5R/6.3V/K	PA_EXP_TXN11_C
PA_EXP_TXP12	PAC28	0.22u/4/X5R/6.3V/K	PA_EXP_TXP12_C
PA_EXP_TXN12	PAC29	0.22u/4/X5R/6.3V/K	PA_EXP_TXN12_C
PA_EXP_TXP13	PAC30	0.22u/4/X5R/6.3V/K	PA_EXP_TXP13_C
PA_EXP_TXN13	PAC31	0.22u/4/X5R/6.3V/K	PA_EXP_TXN13_C
PA_EXP_TXP14	PAC32	0.22u/4/X5R/6.3V/K	PA_EXP_TXP14_C
PA_EXP_TXN14	PAC33	0.22u/4/X5R/6.3V/K	PA_EXP_TXN14_C
PA_EXP_TXP15	PAC34	0.22u/4/X5R/6.3V/K	PA_EXP_TXP15_C
PA_EXP_TXN15	PAC35	0.22u/4/X5R/6.3V/K	PA_EXP_TXN15_C

Gigabyte Technology

Title: PCI EXPRESS * 16

Size: Custom | Document Number: GA-H110M-S2H DDR3 | Rev: 1.0

Date: Monday, September 14, 2015 | Sheet 19 of 49

Rev 0.2

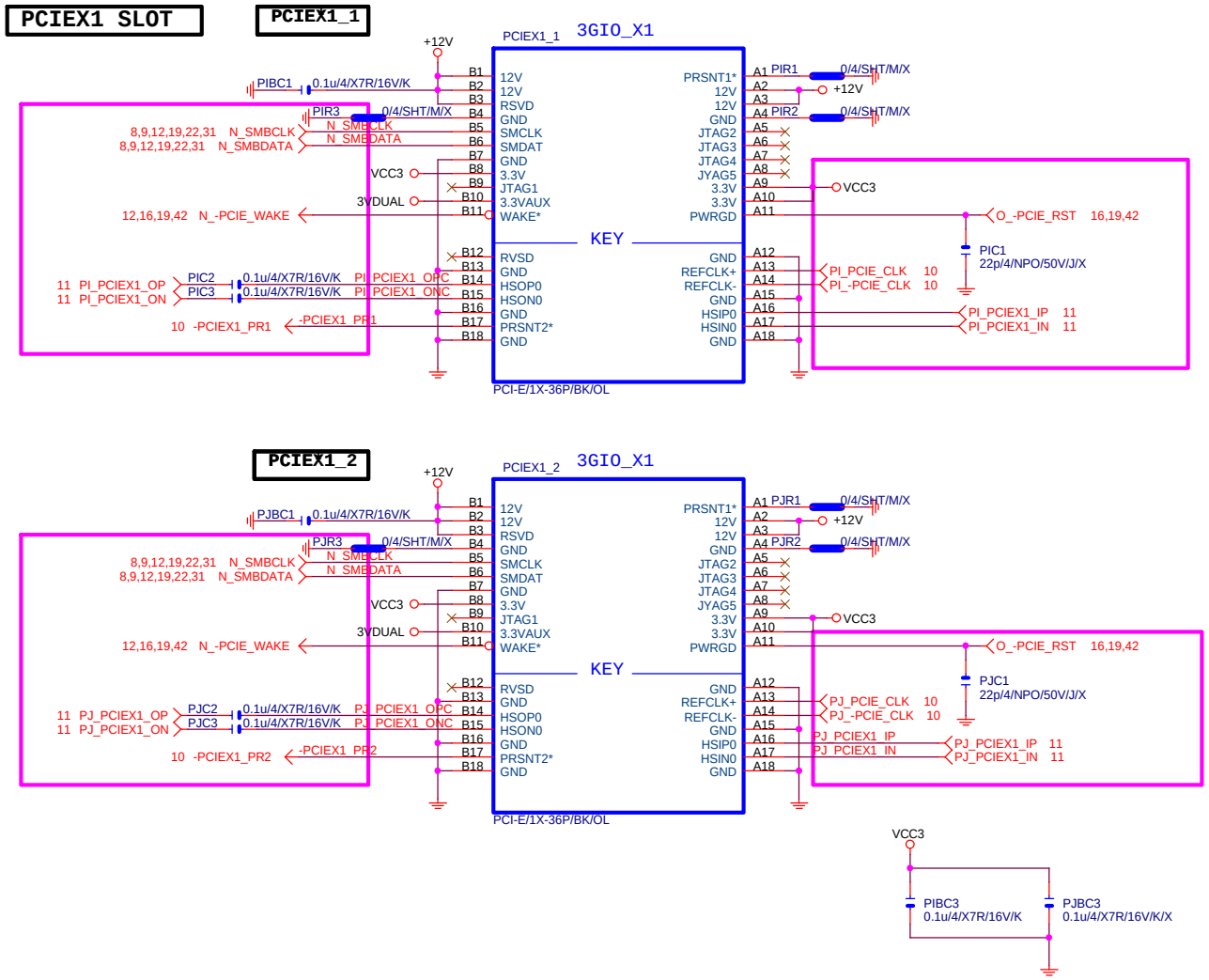

Gigabyte Technology		
Title: PCIE_X1 1,2		
Size: Custom	Document Number: GA-H110M-S2H DDR3	Rev: 1.0
Date: Monday, September 14, 2015	Sheet 20 of 49	

Rev 0.6

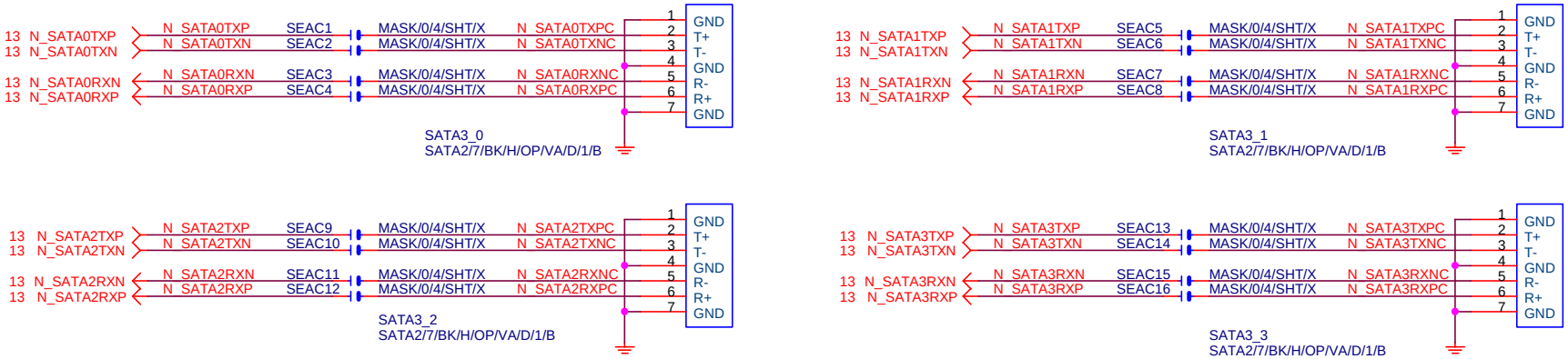

Gigabyte Technology		
Title: SATA EXPRESS		
Size: Custom	Document Number: GA-H110M-S2H DDR3	Rev: 1.0
Date: Monday, September 14, 2015	Sheet 21 of 49	

REV:0.15

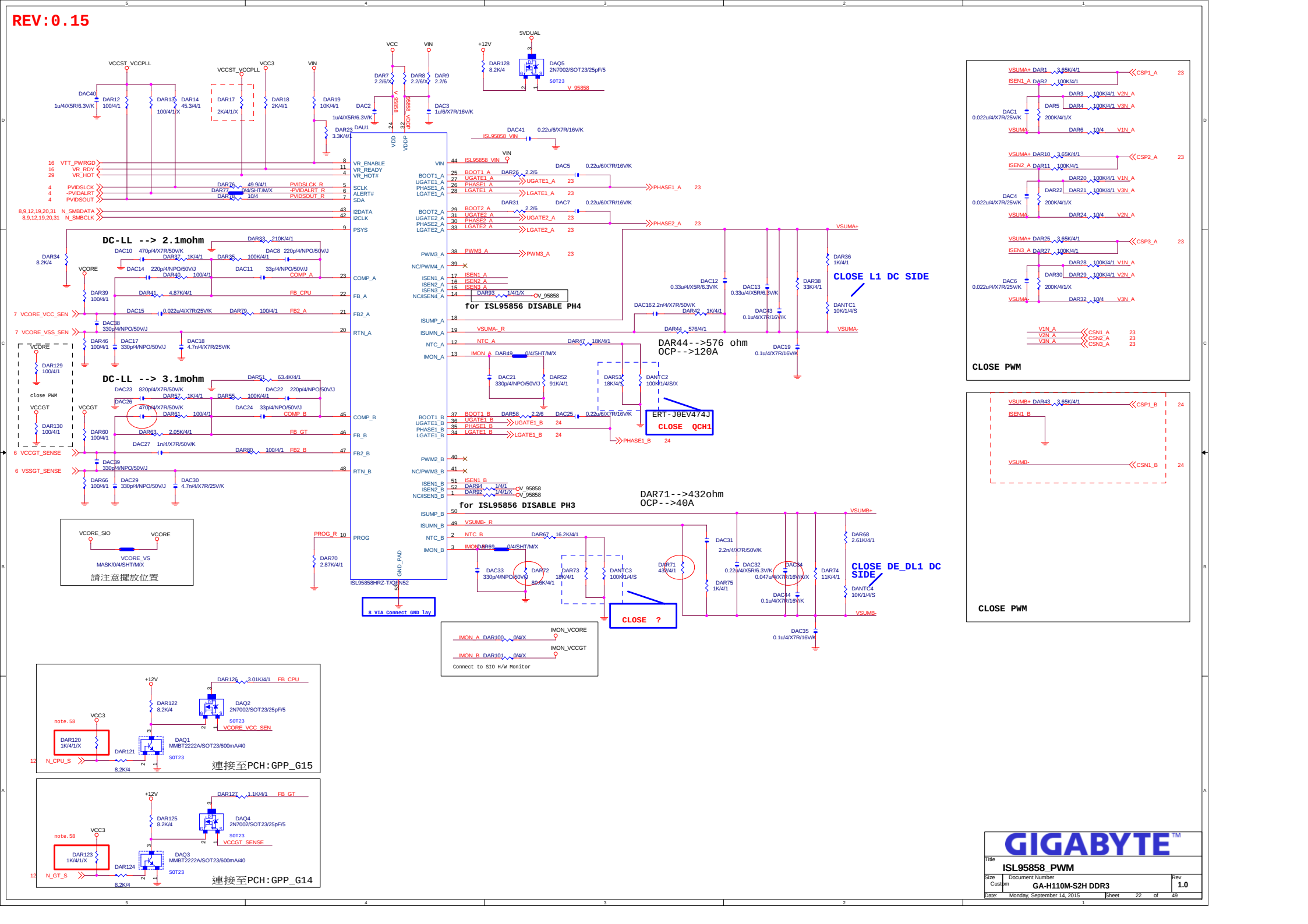
DC-LL --> 2.1mohm
DC-LL --> 3.1mohm
ISL95858HRZ-T/QFN52
for ISL95856 DISABLE PH4
for ISL95856 DISABLE PH3
DAR44-->576 ohm
OCP-->120A
DAR71-->432ohm
OCP-->40A
CLOSE L1 DC SIDE
CLOSE QCH1
CLOSE ?
CLOSE DE_DL1 DC SIDE
CLOSE PWM
CLOSE PWM
請注意擺放位置
連接至PCH:GPP_G15
連接至PCH:GPP_G14
Connect to SIO H/W Monitor
GIGABYTE
ISL95858_PWM
GA-H110M-S2H DDR3
1.0
Monday, September 14, 2015

REV:0.14

VCORE

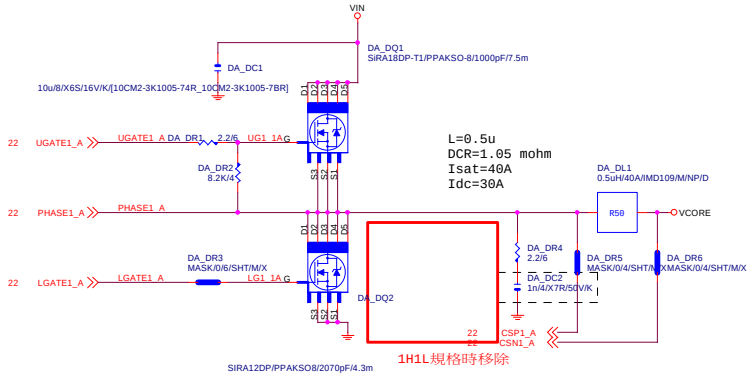

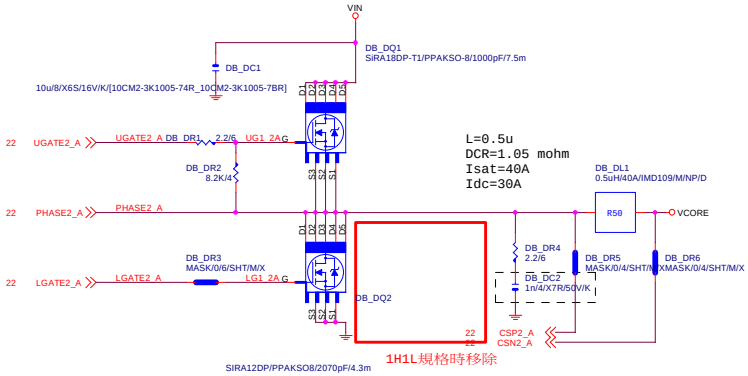

VIN CAP 270u*3PCS

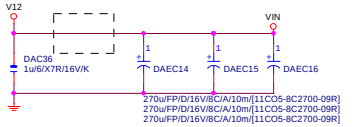

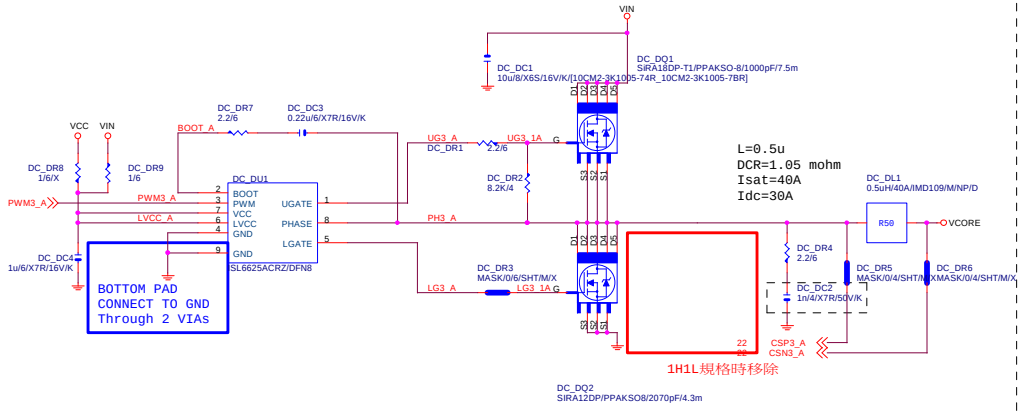

VCORE CAP 560u*4PCS 22u*10PCS

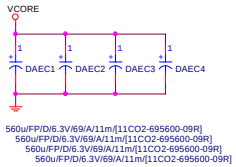

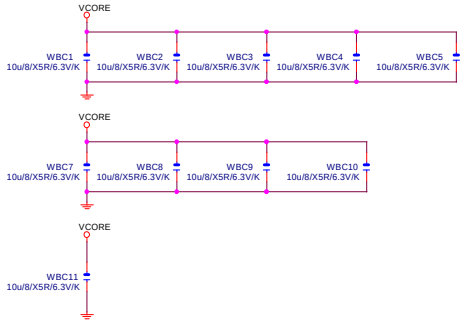

GIGABYTE™

Title	ISL95858_MOS	
Size: Custom	Document Number: GA-H110M-S2H DDR3	Rev: 1.0
Date: Monday, September 14, 2015	Sheet 23 of 49	

REV:0.14

VCCGT

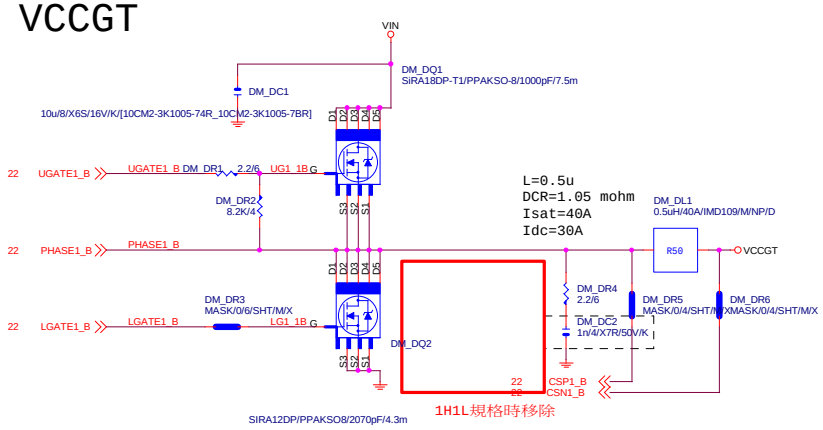

VCCGT CAP

560u*2PCS
22u*2PCS

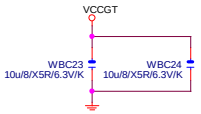

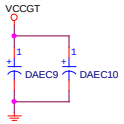

560u/FP/D/6.3V/69/A/11m/[11CO2-695600-09R]
560u/FP/D/6.3V/69/A/11m/[11CO2-695600-09R]

GIGABYTE™

Title	ISL95858_MOS	
Size Custom	Document Number GA-H110M-S2H DDR3	Rev 1.0
Date: Monday, September 14, 2015	Sheet 24 of 49	

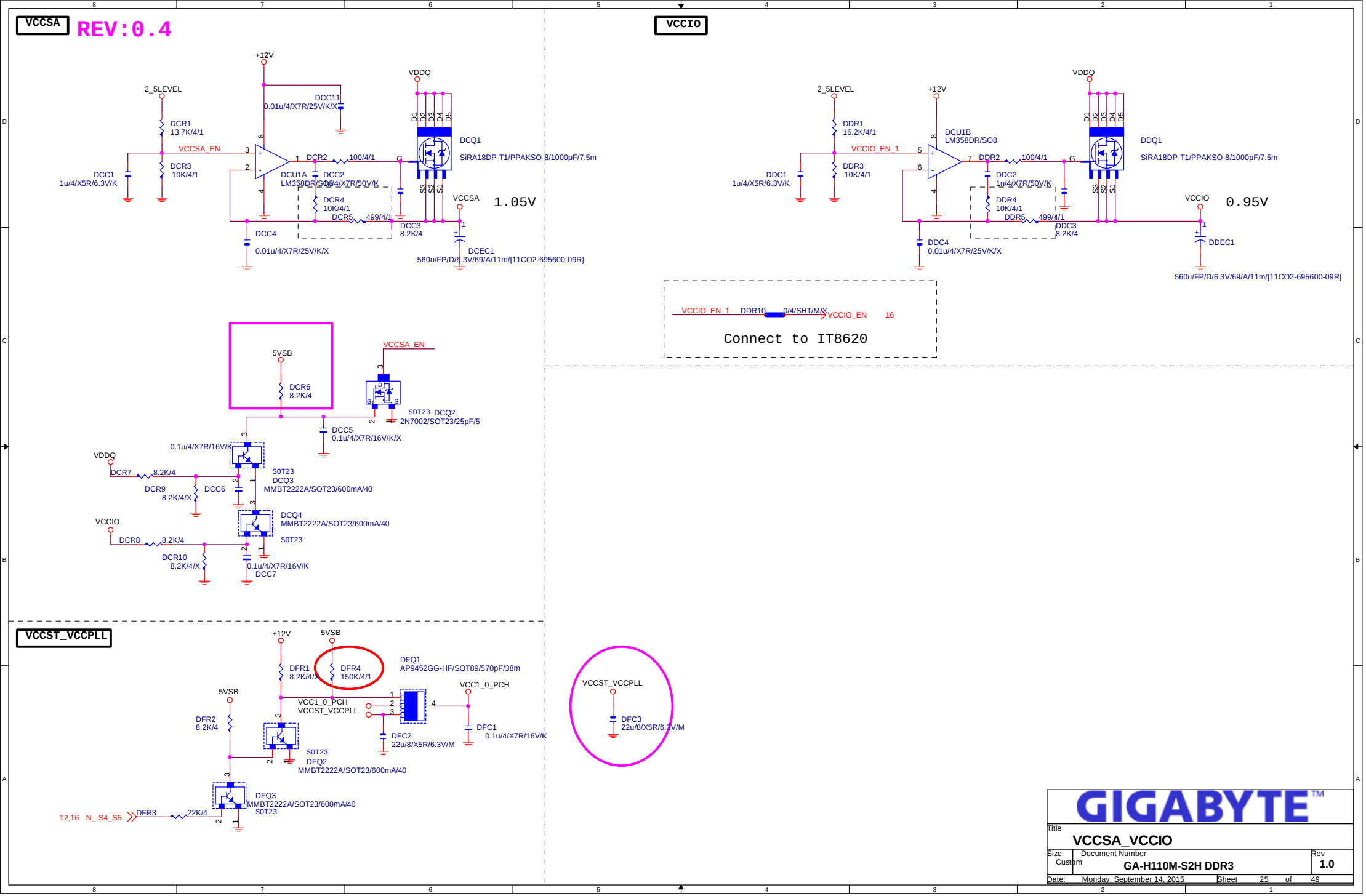
VCCSA
REV:0.4
+12V
2_5LEVEL
DCR1
13.7K/4/1
VCCSA_EN
DCR3
10K/4/1
DCC1
1u/4/X5R/6.3V/K
DCC11
0.01u/4/X7R/25V/K/X
DCU1A
LM358DR/SO8
DCR2
100/4/1
DCC2
1n/4/X7R/50V/K
DCR4
10K/4/1
DCR5
499/4/1
DCC4
0.01u/4/X7R/25V/K/X
VDDQ
DCQ1
SiRA18DP-T1/PPAKSO-8/1000pF/7.5m
DCC3
8.2K/4
VCCSA
1.05V
DCEC1
560u/FP/D/6.3V/69/A/11m/[11CO2-695600-09R]
VCCIO
DCU1B
LM358DR/SO8
DDR1
16.2K/4/1
VCCIO_EN_1
DDR3
10K/4/1
DDC1
1u/4/X5R/6.3V/K
DDR2
100/4/1
DDC2
1n/4/X7R/50V/K
DDR4
10K/4/1
DDR5
499/4/1
DDC4
0.01u/4/X7R/25V/K/X
DDQ1
SiRA18DP-T1/PPAKSO-8/1000pF/7.5m
DDC3
8.2K/4
VCCIO
0.95V
DDEC1
560u/FP/D/6.3V/69/A/11m/[11CO2-695600-09R]
VCCIO_EN_1
DDR10
0/4/SHT/M/X
VCCIO_EN
16
Connect to IT8620
5VSB
DCR6
8.2K/4
VCCSA_EN
S0T23
DCQ2
2N7002/SOT23/25pF/5
DCC5
0.1u/4/X7R/16V/K/X
0.1u/4/X7R/16V/K
VDDQ
DCR7
8.2K/4
DCR9
8.2K/4/X
DCC6
S0T23
DCQ3
MMBT2222A/SOT23/600mA/40
DCQ4
MMBT2222A/SOT23/600mA/40
VCCIO
DCR8
8.2K/4
DCR10
8.2K/4/X
0.1u/4/X7R/16V/K
DCC7
VCCST_VCCPLL
+12V
5VSB
DFR1
8.2K/4/X
DFR4
150K/4/1
DFQ1
AP9452GG-HF/SOT89/570pF/38m
VCC1_0_PCH
VCCST_VCCPLL
DFR2
8.2K/4
DFC2
22u/8/X5R/6.3V/M
DFC1
0.1u/4/X7R/16V/K
S0T23
DFQ2
MMBT2222A/SOT23/600mA/40
DFQ3
MMBT2222A/SOT23/600mA/40
12,16 N_-S4_S5
DFR3
22K/4
VCCST_VCCPLL
DFC3
22u/8/X5R/6.3V/M
GIGABYTE
Title
VCCSA_VCCIO
Size
Custom
Document Number
GA-H110M-S2H DDR3
Rev
1.0
Date: Monday, September 14, 2015
Sheet 25 of 49

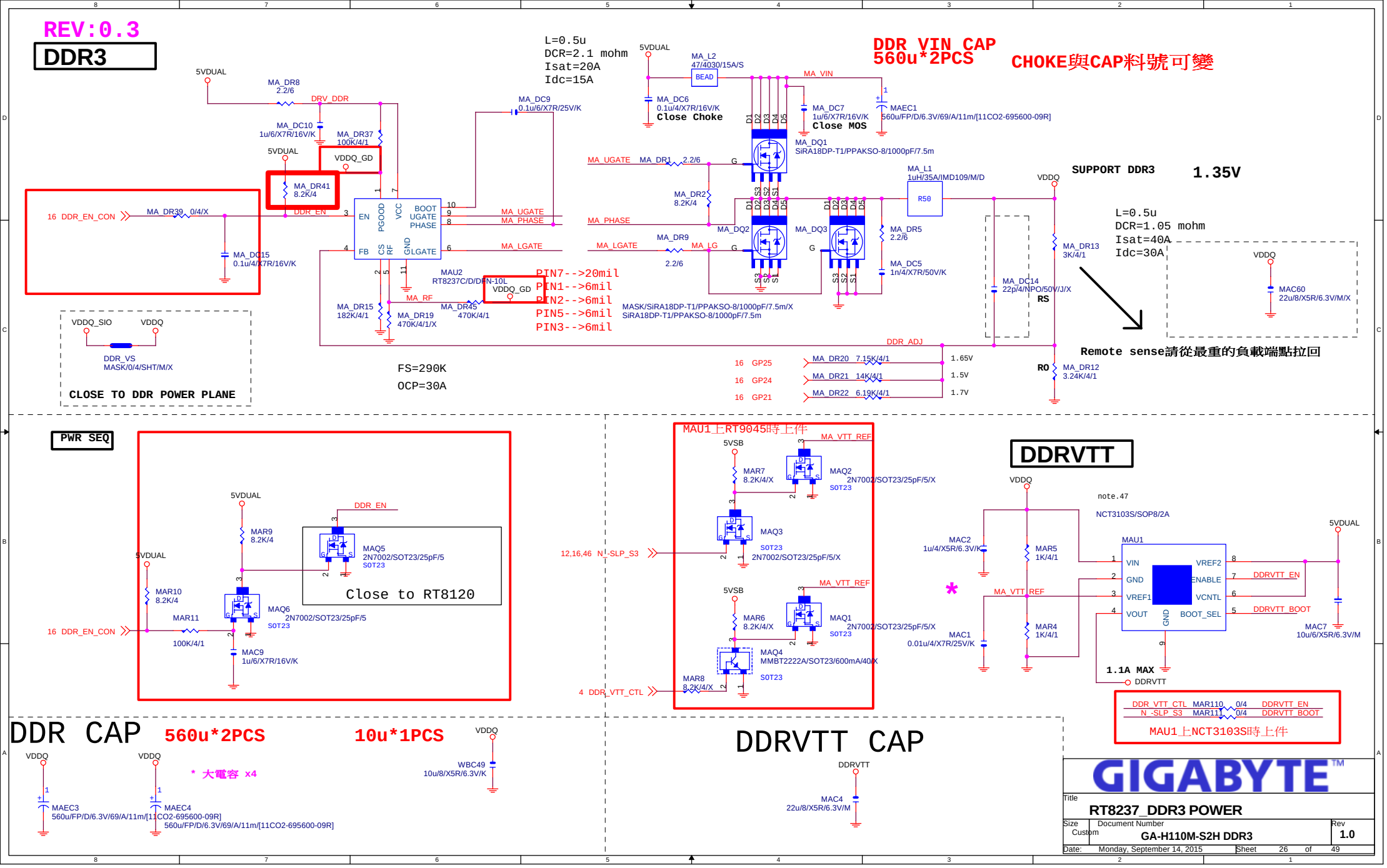
REV:0.3
DDR3
L=0.5u
DCR=2.1 mohm
Isat=20A
Idc=15A
DDR VIN CAP
560u*2PCS
CHOKE與CAP料號可變
5VDUAL
MA_DR8
2.2/6
DRV_DDR
MA_DC10
1u/6/X7R/16V/K
MA_DR37
100K/4/1
VDDQ_GD
MA_DR41
8.2K/4
MA_DC9
0.1u/6/X7R/25V/K
MA_L2
47/4030/15A/S
BEAD
MA_VIN
MA_DC6
0.1u/4/X7R/16V/K
Close Choke
MA_DC7
1u/6/X7R/16V/K
Close MOS
MAEC1
560u/FP/D/6.3V/69/A/11m/[11CO2-695600-09R]
MA_DQ1
SiRA18DP-T1/PPAKSO-8/1000pF/7.5m
MA_UGATE
MA_DR1
2.2/6
MA_DR2
8.2K/4
MA_PHASE
MA_LGATE
MA_DR9
2.2/6
MA_LG
MA_DQ2
MA_DQ3
MA_DR5
2.2/6
MA_DC5
1n/4/X7R/50V/K
MA_L1
1uH/35A/IMD109/M/D
R50
VDDQ
SUPPORT DDR3
1.35V
16 DDR_EN_CON
MA_DR39
0/4/X
DDR_EN
EN
PGOOD
VCC
BOOT
UGATE
PHASE
FB
CS
RF
GND
LGATE
MA_DC15
0.1u/4/X7R/16V/K
MAU2
RT8237C/D/DFN-10L
MA_RF
MA_DR45
470K/4/1
MA_DR15
182K/4/1
MA_DR19
470K/4/1/X
PIN7-->20mil
PIN1-->6mil
PIN2-->6mil
PIN5-->6mil
PIN3-->6mil
MASK/SiRA18DP-T1/PPAKSO-8/1000pF/7.5m/X
SiRA18DP-T1/PPAKSO-8/1000pF/7.5m
MA_DC14
22p/4/NPO/50V/J/X
RS
MA_DR13
3K/4/1
L=0.5u
DCR=1.05 mohm
Isat=40A
Idc=30A
MAC60
22u/8/X5R/6.3V/M/X
VDDQ_SIO
DDR_VS
MASK/0/4/SHT/M/X
CLOSE TO DDR POWER PLANE
FS=290K
OCP=30A
DDR_ADJ
16 GP25
16 GP24
16 GP21
MA_DR20 7.15K/4/1
MA_DR21 14K/4/1
MA_DR22 6.19K/4/1
1.65V
1.5V
1.7V
RO
MA_DR12
3.24K/4/1
Remote sense請從最重的負載端點拉回
PWR SEQ
5VDUAL
MAR9
8.2K/4
DDR_EN
MAQ5
2N7002/SOT23/25pF/5
SOT23
Close to RT8120
MAR10
8.2K/4
MAR11
100K/4/1
MAQ6
2N7002/SOT23/25pF/5
SOT23
MAC9
1u/6/X7R/16V/K
16 DDR_EN_CON
MAU1上RT9045時上件
5VSB
MAR7
8.2K/4/X
MAQ2
2N7002/SOT23/25pF/5/X
SOT23
MAQ3
2N7002/SOT23/25pF/5/X
12,16,46 N_-SLP_S3
MAR6
8.2K/4/X
MAQ1
2N7002/SOT23/25pF/5/X
MAQ4
MMBT2222A/SOT23/600mA/40/X
MAR8
8.2K/4/X
4 DDR_VTT_CTL
DDRVTT
VDDQ
note.47
NCT3103S/SOP8/2A
MAC2
1u/4/X5R/6.3V/K
MAR5
1K/4/1
MAR4
1K/4/1
MAC1
0.01u/4/X7R/25V/K
MAU1
VIN
GND
VREF1
VOUT
VREF2
ENABLE
VCNTL
BOOT_SEL
DDRVTT_EN
DDRVTT_BOOT
MAC7
10u/6/X5R/6.3V/M
1.1A MAX
DDRVTT
DDR_VTT_CTL MAR110 0/4 DDRVTT_EN
N_-SLP_S3 MAR111 0/4 DDRVTT_BOOT
MAU1上NCT3103S時上件
DDR CAP
560u*2PCS
10u*1PCS
VDDQ
WBC49
10u/8/X5R/6.3V/K
MAEC3
560u/FP/D/6.3V/69/A/11m/[11CO2-695600-09R]
MAEC4
560u/FP/D/6.3V/69/A/11m/[11CO2-695600-09R]
* 大電容 x4
DDRVTT CAP
DDRVTT
MAC4
22u/8/X5R/6.3V/M
GIGABYTE
Title
RT8237_DDR3 POWER
Size
Custom
Document Number
GA-H110M-S2H DDR3
Rev
1.0
Date: Monday, September 14, 2015
Sheet 26 of 49

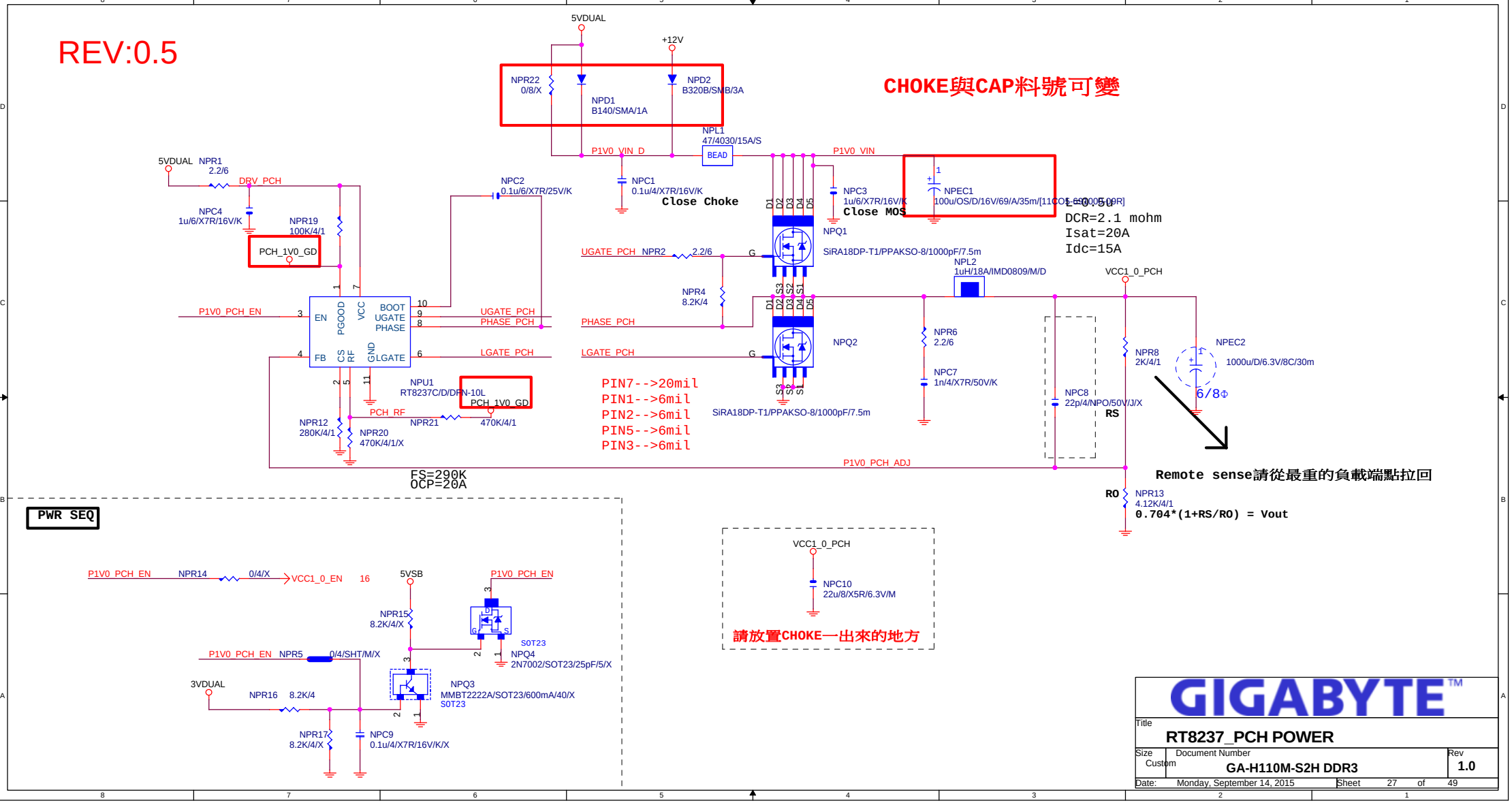
REV:0.5
CHOKE與CAP料號可變
5VDUAL
+12V
NPR22
0/8/X
NPD1
B140/SMA/1A
NPD2
B320B/SMB/3A
NPL1
47/4030/15A/S
BEAD
P1V0_VIN_D
P1V0_VIN
NPC1
0.1u/4/X7R/16V/K
Close Choke
NPC3
1u/6/X7R/16V/K
Close MOS
NPEC1
100u/OS/D/16V/69/A/35m/[11CO1-60005-09R]
L=0.5u
DCR=2.1 mohm
Isat=20A
Idc=15A
NPQ1
SiRA18DP-T1/PPAKSO-8/1000pF/7.5m
NPL2
1uH/18A/IMD0809/M/D
VCC1_0_PCH
5VDUAL
NPR1
2.2/6
DRV_PCH
NPC4
1u/6/X7R/16V/K
NPR19
100K/4/1
PCH_1V0_GD
NPC2
0.1u/6/X7R/25V/K
UGATE_PCH
NPR2
2.2/6
NPR4
8.2K/4
PHASE_PCH
LGATE_PCH
P1V0_PCH_EN
EN
PGOOD
VCC
BOOT
UGATE
PHASE
FB
CS
RF
GND
LGATE
NPU1
RT8237C/D/DFN-10L
PCH_1V0_GD
PCH_RF
NPR21
470K/4/1
NPR12
280K/4/1
NPR20
470K/4/1/X
FS=290K
OCP=20A
PIN7-->20mil
PIN1-->6mil
PIN2-->6mil
PIN5-->6mil
PIN3-->6mil
NPQ2
SiRA18DP-T1/PPAKSO-8/1000pF/7.5m
NPR6
2.2/6
NPC7
1n/4/X7R/50V/K
NPC8
22p/4/NPO/50V/J/X
RS
NPR8
2K/4/1
NPEC2
1000u/D/6.3V/8C/30m
6/8Φ
P1V0_PCH_ADJ
Remote sense請從最重的負載端點拉回
RO
NPR13
4.12K/4/1
0.704*(1+RS/RO) = Vout
PWR SEQ
P1V0_PCH_EN
NPR14
0/4/X
VCC1_0_EN
16
5VSB
NPR15
8.2K/4/X
SOT23
NPQ4
2N7002/SOT23/25pF/5/X
P1V0_PCH_EN
NPR5
0/4/SHT/M/X
3VDUAL
NPR16
8.2K/4
NPQ3
MMBT2222A/SOT23/600mA/40/X
SOT23
NPR17
8.2K/4/X
NPC9
0.1u/4/X7R/16V/K/X
VCC1_0_PCH
NPC10
22u/8/X5R/6.3V/M
請放置CHOKE一出來的地方
GIGABYTE
Title
RT8237_PCH POWER
Size
Custom
Document Number
GA-H110M-S2H DDR3
Rev
1.0
Date:
Monday, September 14, 2015
Sheet
27
of
49

REV:0.51

5VDUAL

* update 5Vdual circuit
, from SKL 0.2B

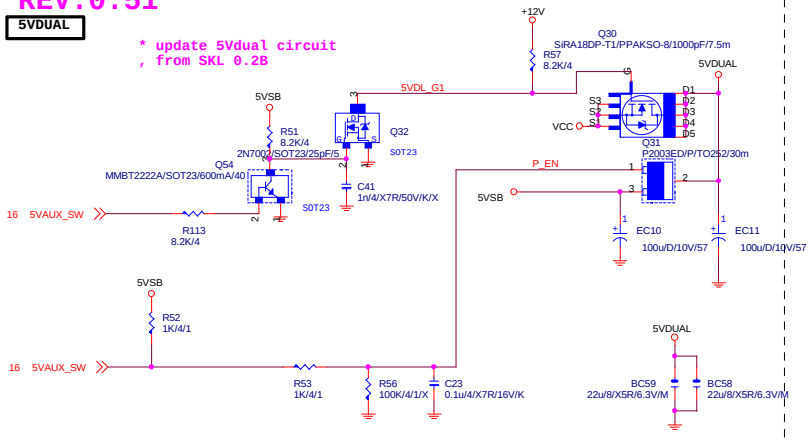

3VDUAL

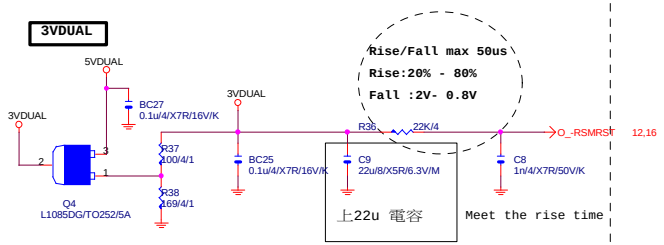

3VDUAL_PCH

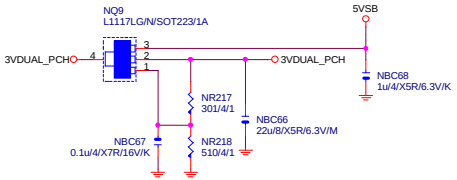

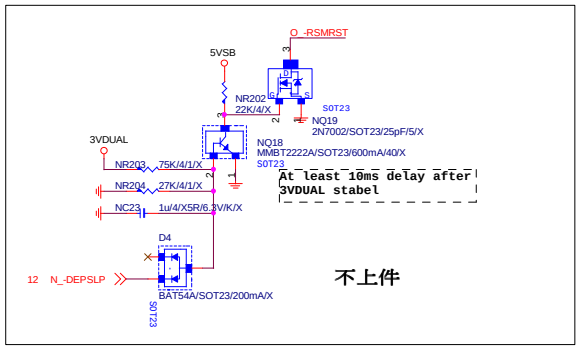

Gigabyte Technology		
Title: DISCRETE POWER		
Size: Custom	Document Number: GA-H110M-S2H DDR3	Rev: 1.0
Date: Monday, September 14, 2015	Sheet 28 of 49	

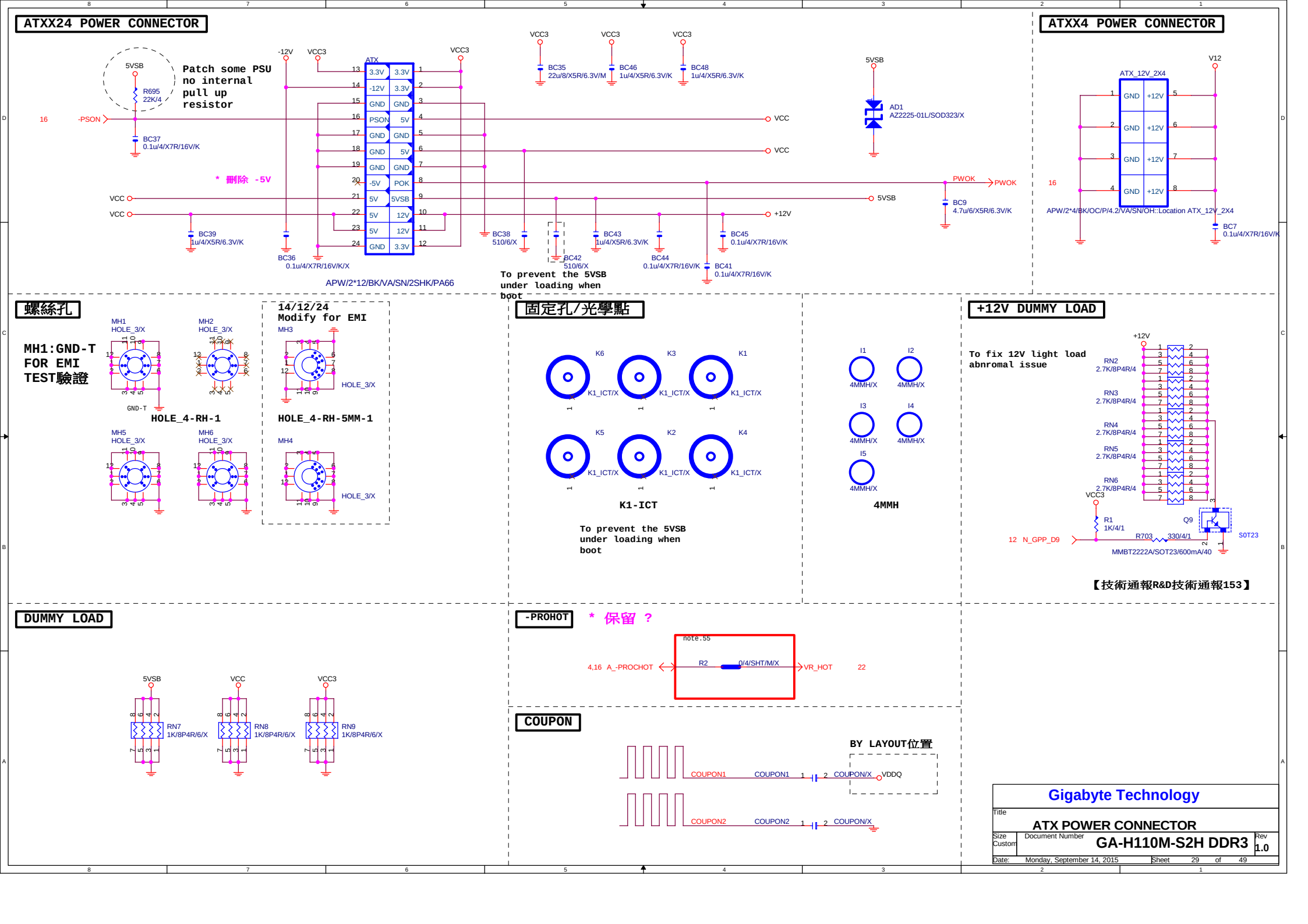
ATXX24 POWER CONNECTOR
Patch some PSU no internal pull up resistor
5VSB
R695 22K/4
16 -PSON
BC37 0.1u/4/X7R/16V/K
* 刪除 -5V
VCC
VCC
BC39 1u/4/X5R/6.3V/K
-12V
VCC3
BC36 0.1u/4/X7R/16V/K/X
ATX
3.3V 3.3V
-12V 3.3V
GND GND
PSON 5V
GND GND
GND 5V
GND GND
-5V POK
5V 5VSB
5V 12V
5V 12V
GND 3.3V
APW/2*12/BK/VA/SN/2SHK/PA66
VCC3
BC35 22u/8/X5R/6.3V/M
BC46 1u/4/X5R/6.3V/K
BC48 1u/4/X5R/6.3V/K
VCC
VCC
5VSB
AD1 AZ2225-01L/SOD323/X
PWOK
PWOK
BC9 4.7u/6/X5R/6.3V/K
+12V
BC38 510/6/X
BC42 510/6/X
BC43 1u/4/X5R/6.3V/K
BC44 0.1u/4/X7R/16V/K
BC45 0.1u/4/X7R/16V/K
BC41 0.1u/4/X7R/16V/K
To prevent the 5VSB under loading when boot
ATXX4 POWER CONNECTOR
ATX_12V_2X4
V12
GND +12V
16
APW/2*4/BK/OC/P/4.2/VA/SN/OH::Location ATX_12V_2X4
BC7 0.1u/4/X7R/16V/K
螺絲孔
MH1:GND-T FOR EMI TEST驗證
MH1 HOLE_3/X
MH2 HOLE_3/X
GND-T
HOLE_4-RH-1
14/12/24 Modify for EMI
MH3
HOLE_3/X
HOLE_4-RH-5MM-1
MH5 HOLE_3/X
MH6 HOLE_3/X
MH4
HOLE_3/X
固定孔/光學點
K6 K3 K1
K5 K2 K4
K1_ICT/X
K1-ICT
To prevent the 5VSB under loading when boot
I1 I2 I3 I4 I5
4MMH/X
4MMH
+12V DUMMY LOAD
To fix 12V light load abnromal issue
+12V
RN2 2.7K/8P4R/4
RN3 2.7K/8P4R/4
RN4 2.7K/8P4R/4
RN5 2.7K/8P4R/4
RN6 2.7K/8P4R/4
VCC3
R1 1K/4/1
Q9
12 N_GPP_D9
R703 330/4/1
SOT23
MMBT2222A/SOT23/600mA/40
【技術通報R&D技術通報153】
DUMMY LOAD
5VSB
VCC
VCC3
RN7 1K/8P4R/6/X
RN8 1K/8P4R/6/X
RN9 1K/8P4R/6/X
-PROHOT
* 保留 ?
note.55
4,16 A_-PROCHOT
R2 0/4/SHT/M/X
VR_HOT 22
COUPON
BY LAYOUT位置
COUPON1 COUPON1 COUPON/X VDDQ
COUPON2 COUPON2 COUPON/X
Gigabyte Technology
Title
ATX POWER CONNECTOR
Size Custom
Document Number
GA-H110M-S2H DDR3
Rev 1.0
Date: Monday, September 14, 2015
Sheet 29 of 49

KB_MS_USB

Rev: 0.7

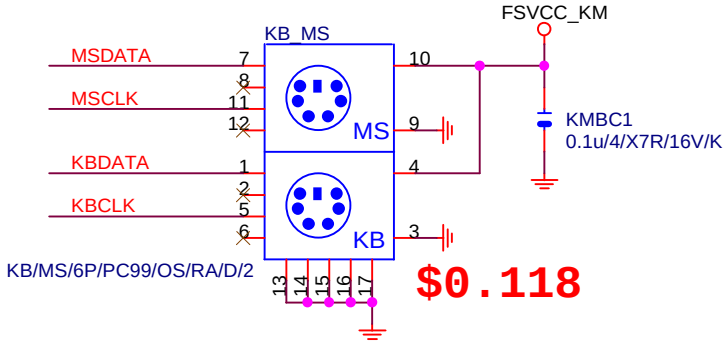

$0.118

ESD

NET 可變, 與其他USB SHARE

KB PWR FUSE-0805

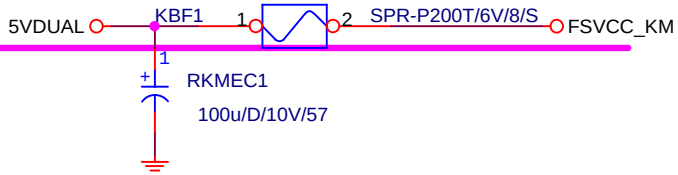

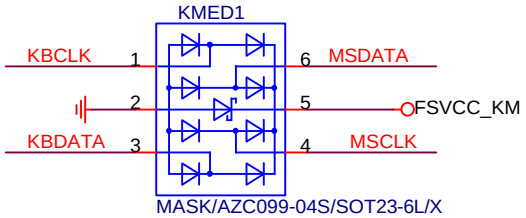

KB_MS_USB DAMPING/PU

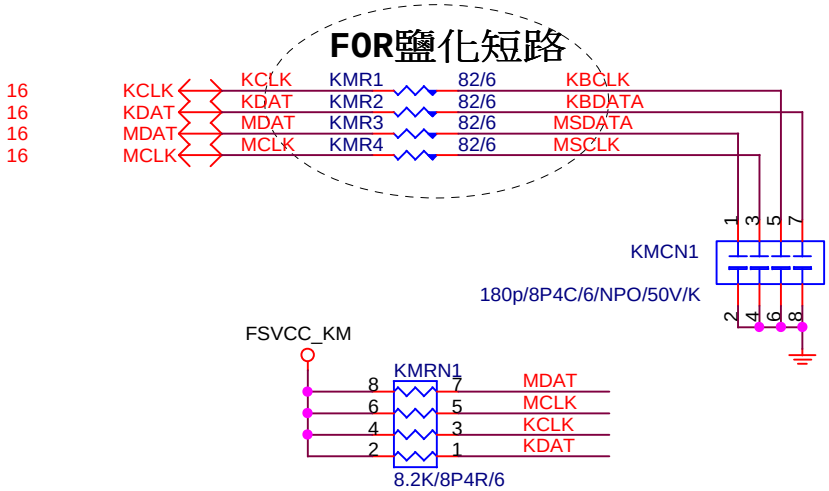

KB_MS_USB PWR

Gigabyte Technology		
Title	KB_MS_USB	
Size A	Document Number GA-H110M-S2H DDR3	Rev 1.0
Date: Monday, September 14, 2015	Sheet 30 of 49	

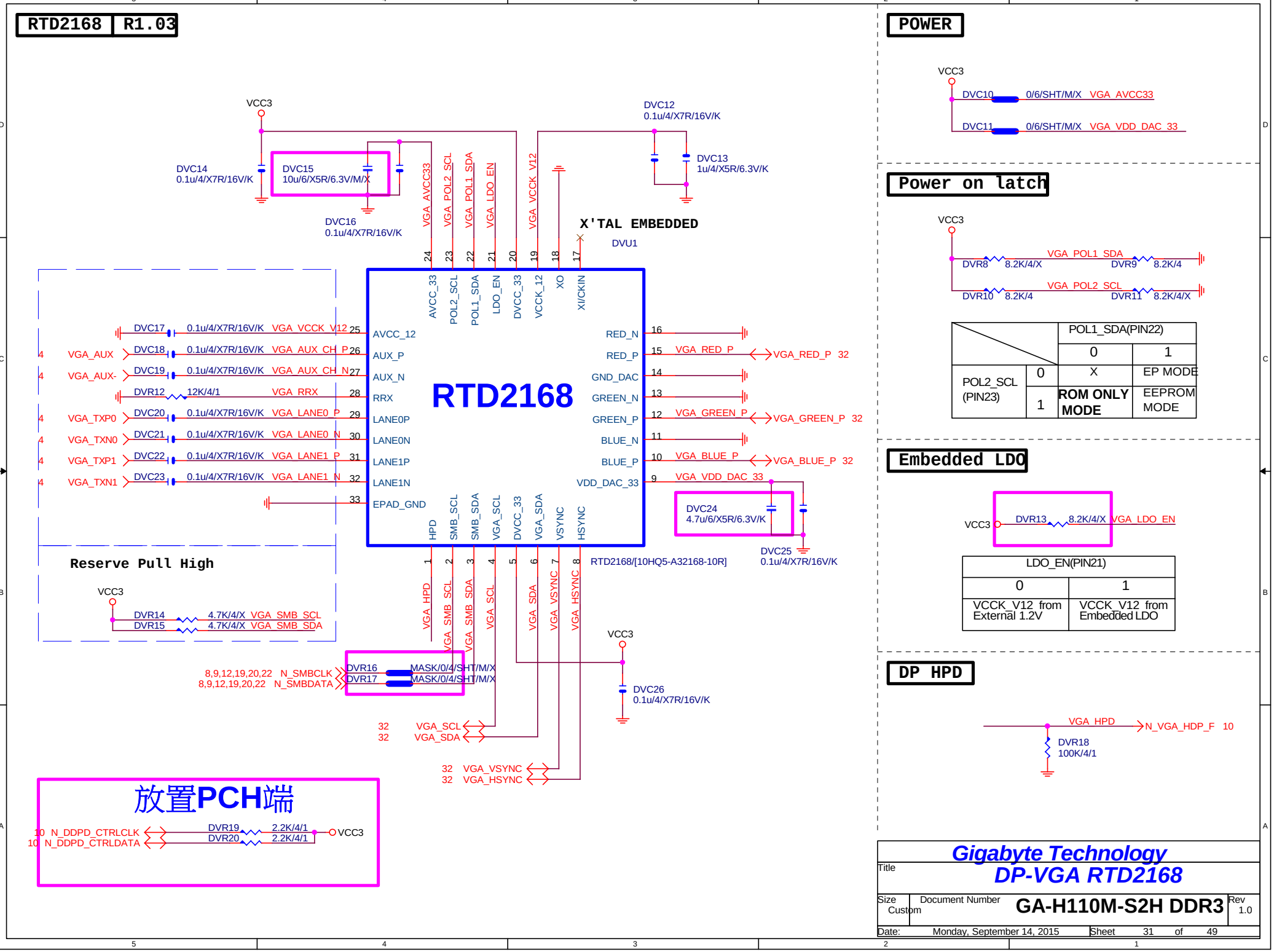
RTD2168 R1.03
VCC3
DVC14 0.1u/4/X7R/16V/K
DVC15 10u/6/X5R/6.3V/M/X
DVC16 0.1u/4/X7R/16V/K
DVC12 0.1u/4/X7R/16V/K
DVC13 1u/4/X5R/6.3V/K
VGA_AVCC33
VGA_POL2_SCL
VGA_POL1_SDA
VGA_LDO_EN
VGA_VCCK_V12
X'TAL EMBEDDED
DVU1
RTD2168
AVCC_33
POL2_SCL
POL1_SDA
LDO_EN
DVCC_33
VCCK_12
XO
XI/CKIN
AVCC_12
AUX_P
AUX_N
RRX
LANE0P
LANE0N
LANE1P
LANE1N
EPAD_GND
RED_N
RED_P
GND_DAC
GREEN_N
GREEN_P
BLUE_N
BLUE_P
VDD_DAC_33
HPD
SMB_SCL
SMB_SDA
VGA_SCL
DVCC_33
VGA_SDA
VSYNC
HSYNC
DVC17 0.1u/4/X7R/16V/K VGA_VCCK_V12
DVC18 0.1u/4/X7R/16V/K VGA_AUX_CH_P
DVC19 0.1u/4/X7R/16V/K VGA_AUX_CH_N
DVR12 12K/4/1 VGA_RRX
DVC20 0.1u/4/X7R/16V/K VGA_LANE0_P
DVC21 0.1u/4/X7R/16V/K VGA_LANE0_N
DVC22 0.1u/4/X7R/16V/K VGA_LANE1_P
DVC23 0.1u/4/X7R/16V/K VGA_LANE1_N
VGA_AUX
VGA_AUX-
VGA_TXP0
VGA_TXN0
VGA_TXP1
VGA_TXN1
VGA_RED_P
VGA_RED_P 32
VGA_GREEN_P
VGA_GREEN_P 32
VGA_BLUE_P
VGA_BLUE_P 32
VGA_VDD_DAC_33
DVC24 4.7u/6/X5R/6.3V/K
DVC25 0.1u/4/X7R/16V/K
RTD2168/[10HQ5-A32168-10R]
Reserve Pull High
DVR14 4.7K/4/X VGA_SMB_SCL
DVR15 4.7K/4/X VGA_SMB_SDA
VGA_HPD
VGA_SMB_SCL
VGA_SMB_SDA
VGA_SCL
VGA_SDA
VGA_VSYNC
VGA_HSYNC
8,9,12,19,20,22 N_SMBCLK
8,9,12,19,20,22 N_SMBDATA
DVR16 MASK/0/4/SHT/M/X
DVR17 MASK/0/4/SHT/M/X
DVC26 0.1u/4/X7R/16V/K
32 VGA_SCL
32 VGA_SDA
32 VGA_VSYNC
32 VGA_HSYNC
放置PCH端
10 N_DDPD_CTRLCLK
10 N_DDPD_CTRLDATA
DVR19 2.2K/4/1
DVR20 2.2K/4/1
POWER
DVC10 0/6/SHT/M/X VGA_AVCC33
DVC11 0/6/SHT/M/X VGA_VDD_DAC_33
Power on latch
DVR8 8.2K/4/X
DVR9 8.2K/4
DVR10 8.2K/4
DVR11 8.2K/4/X
VGA_POL1_SDA
VGA_POL2_SCL
POL1_SDA(PIN22)
POL2_SCL (PIN23)
0 X EP MODE
1 ROM ONLY MODE EEPROM MODE
Embedded LDO
DVR13 8.2K/4/X VGA_LDO_EN
LDO_EN(PIN21)
0 VCCK_V12 from External 1.2V
1 VCCK_V12 from Embedded LDO
DP HPD
VGA_HPD
N_VGA_HDP_F 10
DVR18 100K/4/1
Gigabyte Technology
Title
DP-VGA RTD2168
Size Custom
Document Number
GA-H110M-S2H DDR3
Rev 1.0
Date: Monday, September 14, 2015
Sheet 31 of 49

VGA SIGNAL R1.03

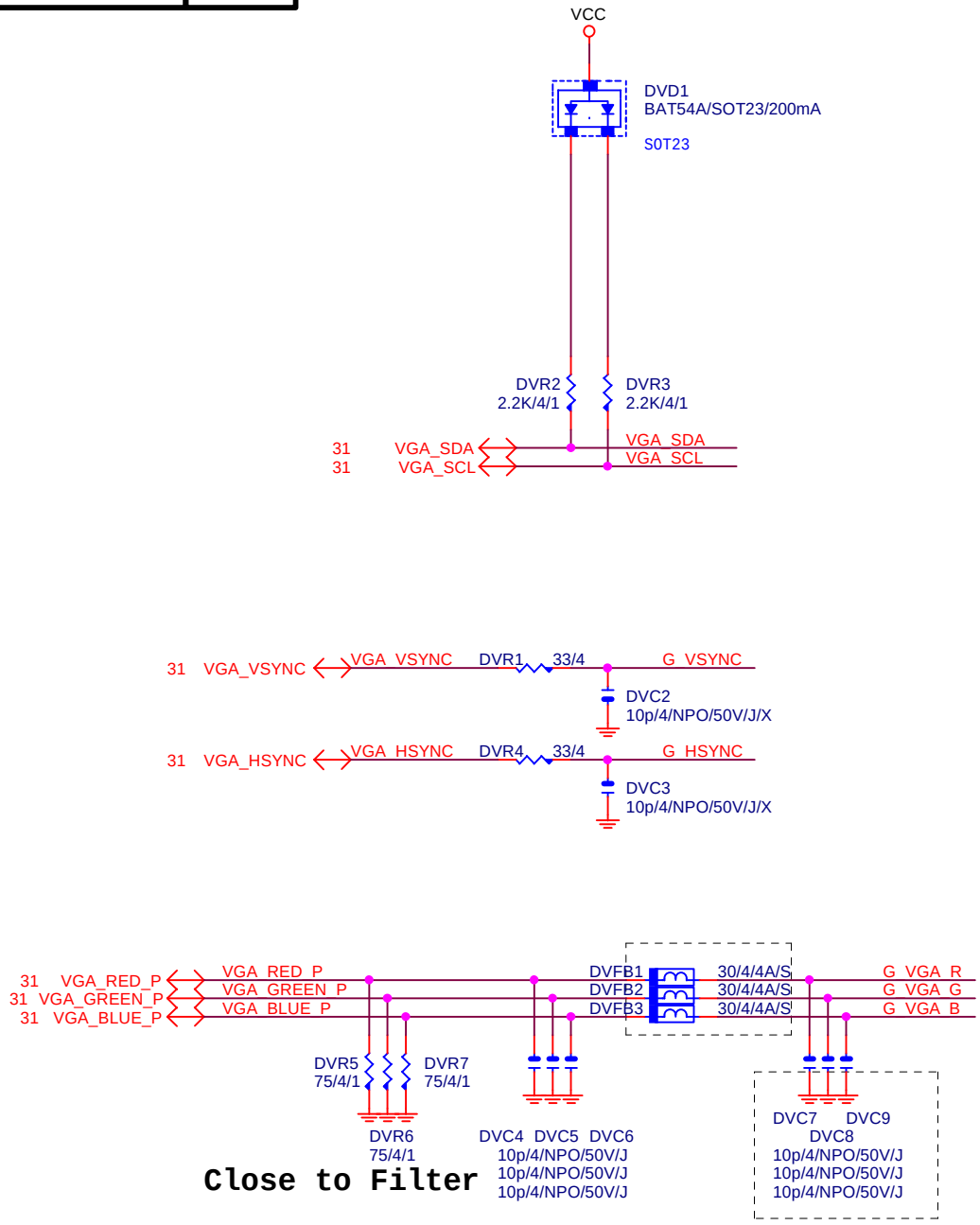

VGA CONN.

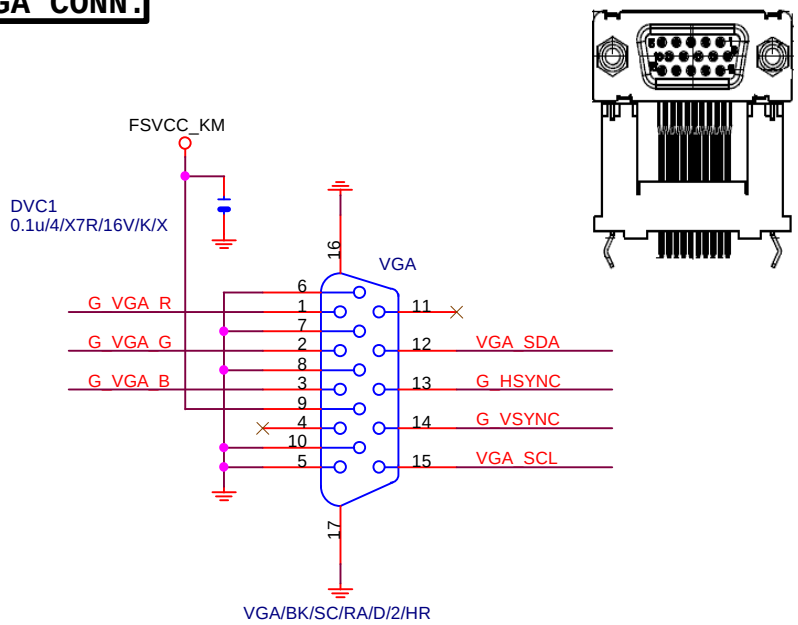

VGA ESD

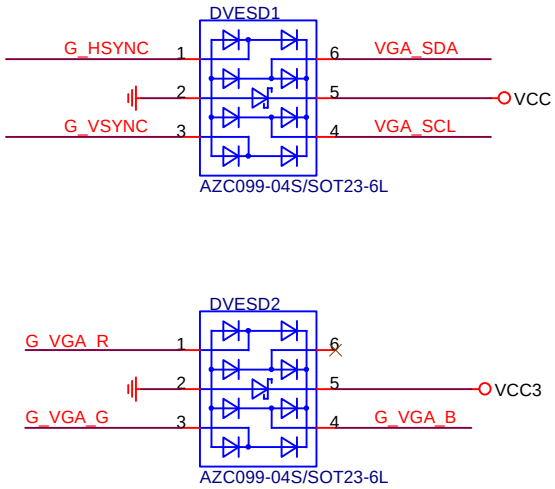

Title	Gigabyte Technology NXP-PTN3356		
Size Custom	Document Number	GA-H110M-S2H DDR3	Rev 1.0
Date: Monday, September 14, 2015	Sheet 32 of 49		

Rev: 0.7

ESD 可自行SWAP PIN ,CONN端 NET 名稱 不可

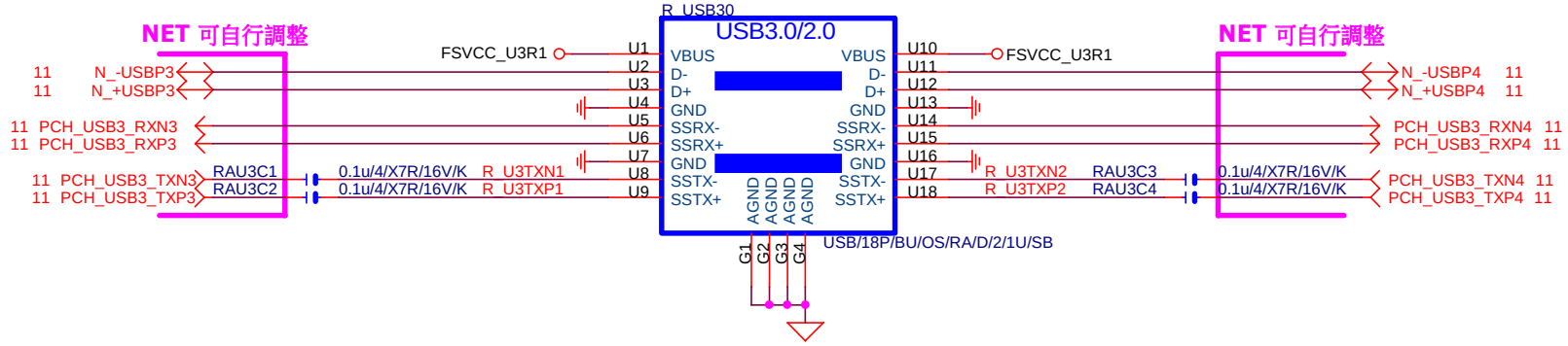

ESD

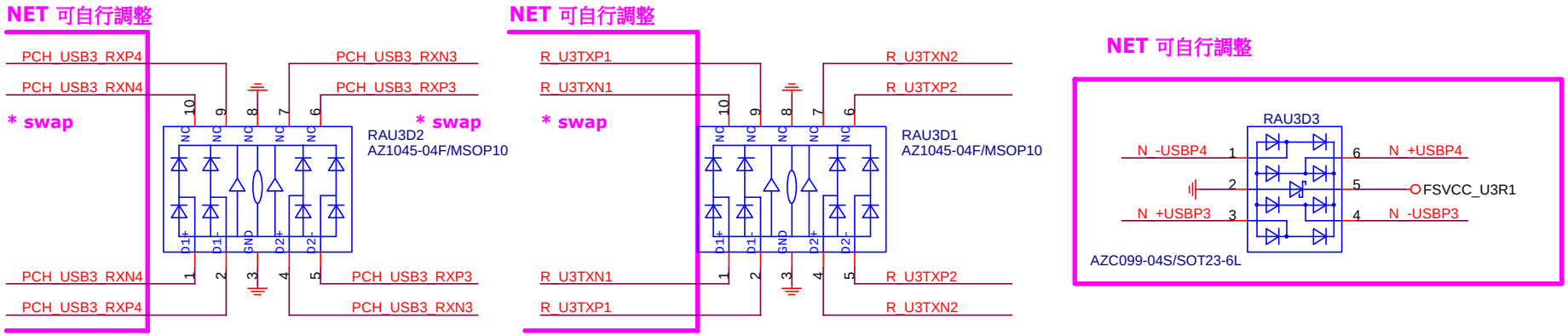

FUSE

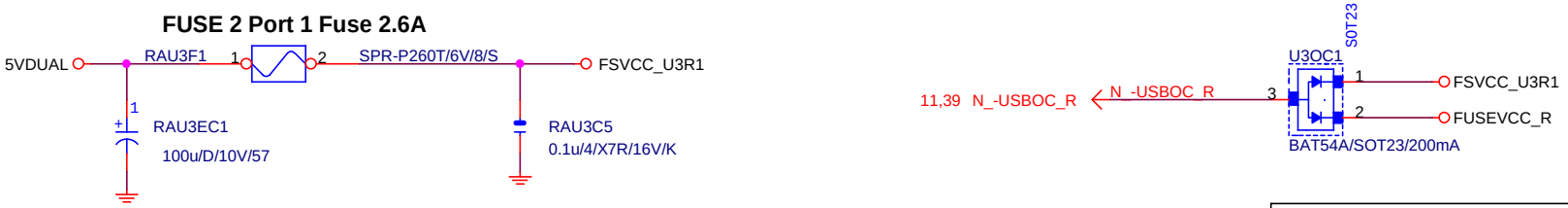

Gigabyte Technology			
Title	R_USB30,USB_OC		
Size Custom	Document Number	GA-H110M-S2H DDR3	Rev 1.0
Date: Monday, September 14, 2015	Sheet 33 of 49		

Rev: 0.61

REAR USB1

NET 可變

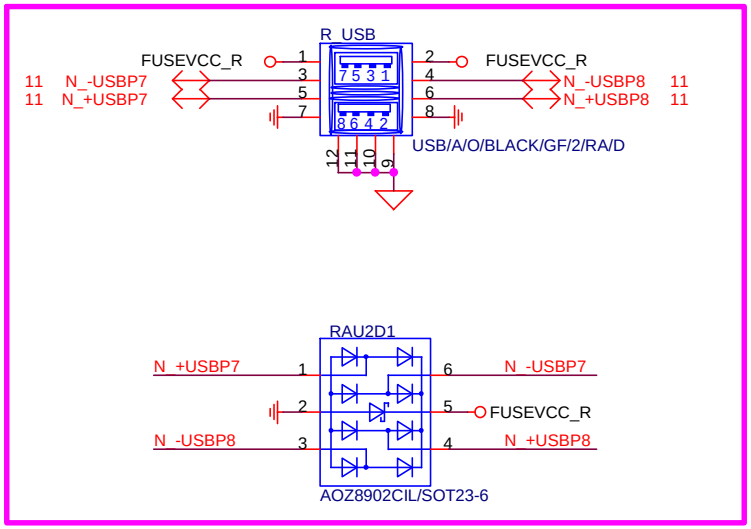

ESD

FUSE 2 Port 1 Fuse 2A

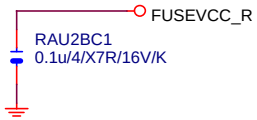

FUSE

Gigabyte Technology			
Title	R_USB30,USB_OC		
Size Custom	Document Number	GA-H110M-S2H DDR3	Rev 1.0
Date: Monday, September 14, 2015	Sheet 34 of 49		

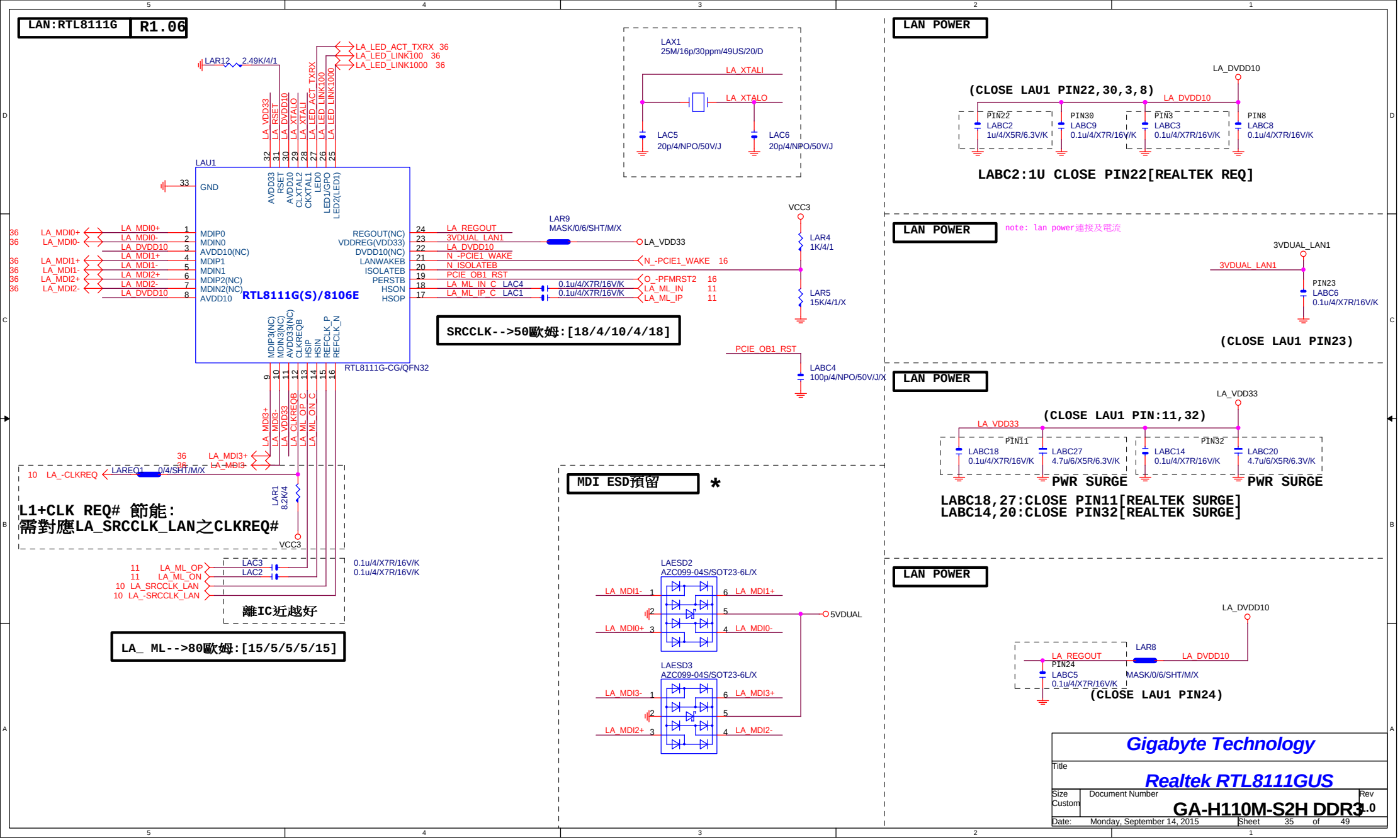
LAN:RTL8111G
R1.06
LAR12 2.49K/4/1
LA_LED_ACT_TXRX 36
LA_LED_LINK100 36
LA_LED_LINK1000 36
LAU1
GND
RTL8111G(S)/8106E
RTL8111G-CG/QFN32
LA_MDI0+
LA_MDI0-
LA_DVDD10
LA_MDI1+
LA_MDI1-
LA_MDI2+
LA_MDI2-
LA_REGOUT
3VDUAL_LAN1
N_-PCIE1_WAKE
N_ISOLATEB
PCIE_OB1_RST
LA_ML_IN_C LAC4
LA_ML_IP_C LAC1
0.1u/4/X7R/16V/K
O_-PFMRST2
LA_ML_IN
LA_ML_IP
LAR9
MASK/0/6/SHT/M/X
LA_VDD33
VCC3
LAR4
1K/4/1
LAR5
15K/4/1/X
LABC4
100p/4/NPO/50V/J/X
SRCCLK-->50歐姆:[18/4/10/4/18]
LA_MDI3+
LA_MDI3-
LA_-CLKREQ
LAREQ1
LAR1
8.2K/4
L1+CLK REQ# 節能:
需對應LA_SRCCLK_LAN之CLKREQ#
LA_ML_OP
LA_ML_ON
LA_SRCCLK_LAN
LA_-SRCCLK_LAN
LAC3
LAC2
離IC近越好
LA_ML-->80歐姆:[15/5/5/5/15]
LAX1
25M/16p/30ppm/49US/20/D
LA_XTALI
LA_XTALO
LAC5
20p/4/NPO/50V/J
LAC6
20p/4/NPO/50V/J
MDI ESD預留
*
LAESD2
AZC099-04S/SOT23-6L/X
LA_MDI1-
LA_MDI1+
LA_MDI0+
LA_MDI0-
5VDUAL
LAESD3
AZC099-04S/SOT23-6L/X
LA_MDI3-
LA_MDI3+
LA_MDI2+
LA_MDI2-
LAN POWER
LA_DVDD10
(CLOSE LAU1 PIN22,30,3,8)
PIN22
LABC2
1u/4/X5R/6.3V/K
PIN30
LABC9
0.1u/4/X7R/16V/K
PIN3
LABC3
0.1u/4/X7R/16V/K
PIN8
LABC8
0.1u/4/X7R/16V/K
LABC2:1U CLOSE PIN22[REALTEK REQ]
LAN POWER
note: lan power連接及電流
3VDUAL_LAN1
PIN23
LABC6
0.1u/4/X7R/16V/K
(CLOSE LAU1 PIN23)
LAN POWER
LA_VDD33
(CLOSE LAU1 PIN:11,32)
PIN11
LABC18
0.1u/4/X7R/16V/K
LABC27
4.7u/6/X5R/6.3V/K
PIN32
LABC14
0.1u/4/X7R/16V/K
LABC20
4.7u/6/X5R/6.3V/K
PWR SURGE
PWR SURGE
LABC18,27:CLOSE PIN11[REALTEK SURGE]
LABC14,20:CLOSE PIN32[REALTEK SURGE]
LAN POWER
LA_DVDD10
LA_REGOUT
LAR8
PIN24
LABC5
0.1u/4/X7R/16V/K
MASK/0/6/SHT/M/X
(CLOSE LAU1 PIN24)
Gigabyte Technology
Title
Realtek RTL8111GUS
Size
Custom
Document Number
GA-H110M-S2H DDR3
Rev
1.0
Date: Monday, September 14, 2015
Sheet 35 of 49

USB_LAN CONNECTOR R1.06

RMA ESD PROTECT

note:可變更USB NAME

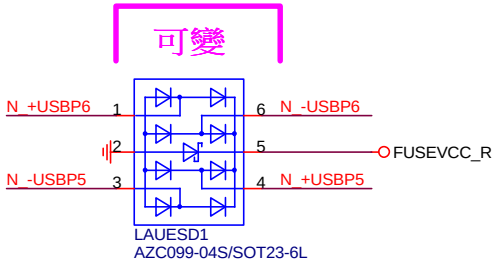

USB_LAN CONNECTOR

note:可變更USB NAME

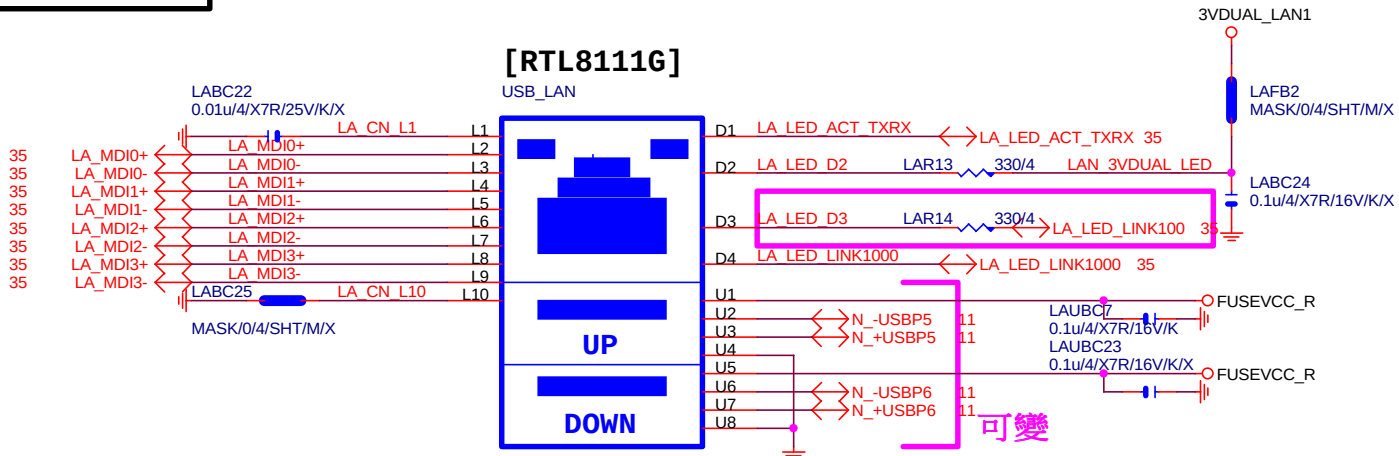

LA_MDI-->100歐姆:[20/4/8/4/20]

USB_LAN LAYOUT示意圖

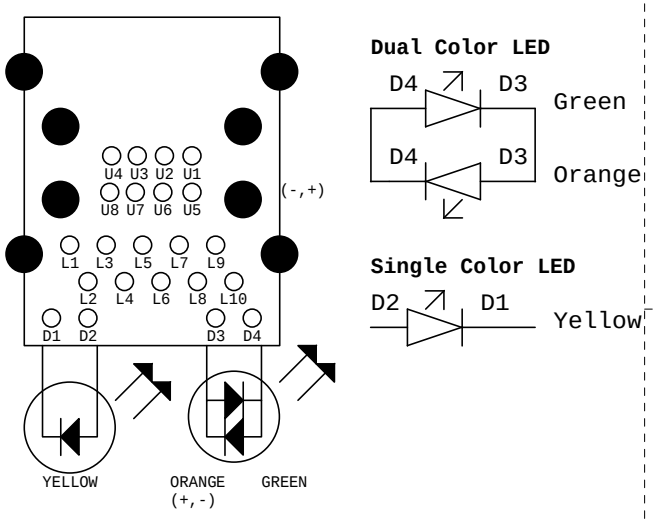

USB POWER

note:可變更FUSE

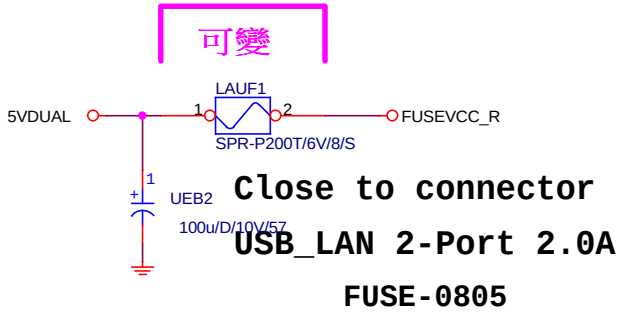

EMI SHORT PAD

PS:視EMI需求

LAN POWER

note: lan power連接及電流

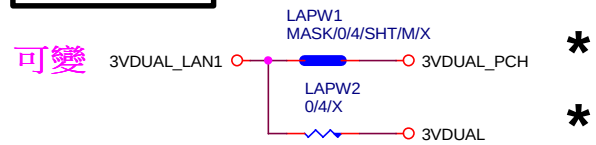

Gigabyte Technology		
Title: LAN CONNECTOR-RTL8111G		
Size: Custom	Document Number: GA-H110M-S2H DDR3	Rev: 1.0
Date: Monday, September 14, 2015	Sheet 36 of 49	

Rev 0.5

ALC887 三孔 AUDIO JACK

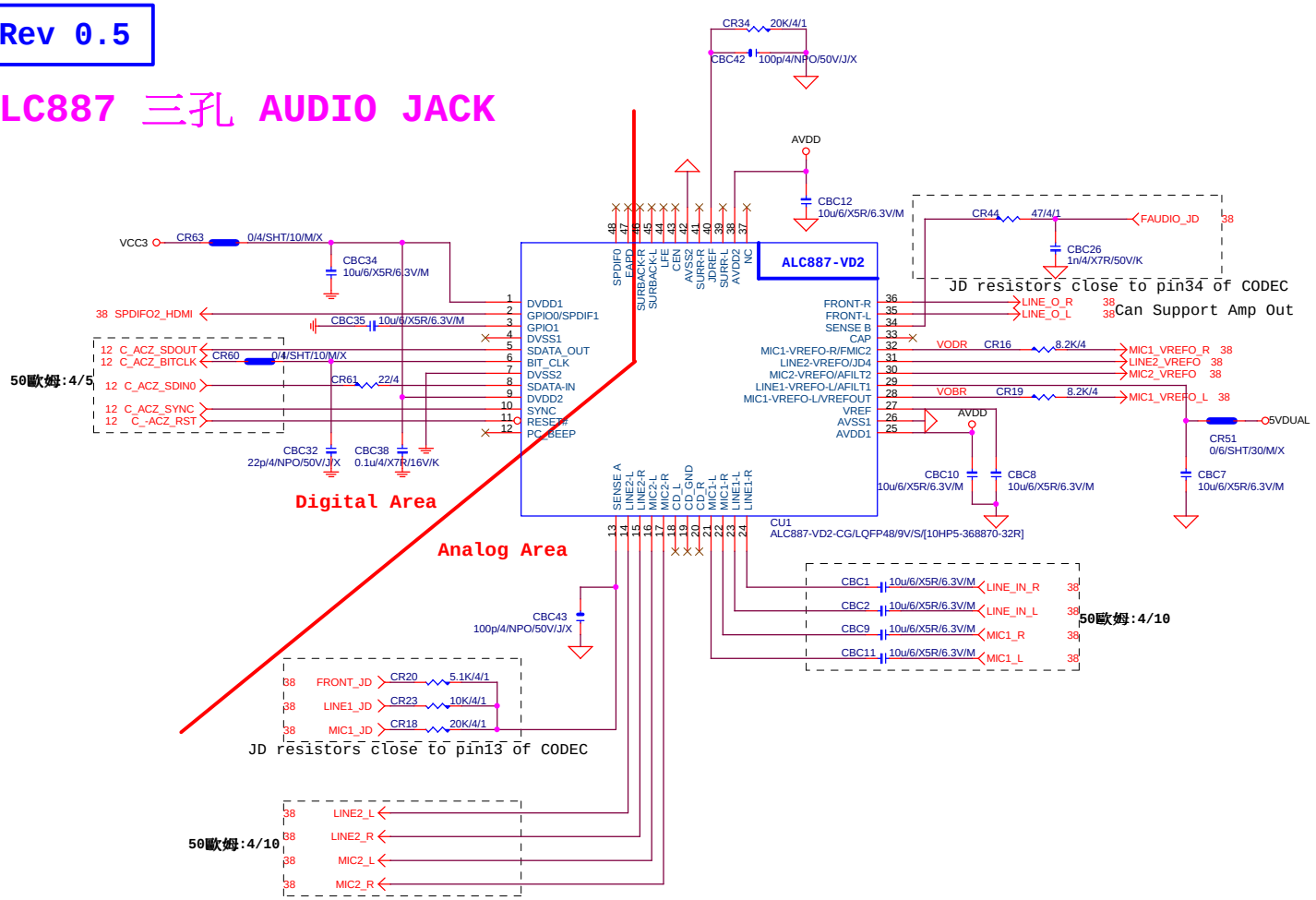

LAYOUT注意:螺絲孔下GND方式
1. MH1空間夠,下DGND
空間不夠,改為Isolate
2. MH2一律改為Isolate

MH1	MH2
DGND	Isolate

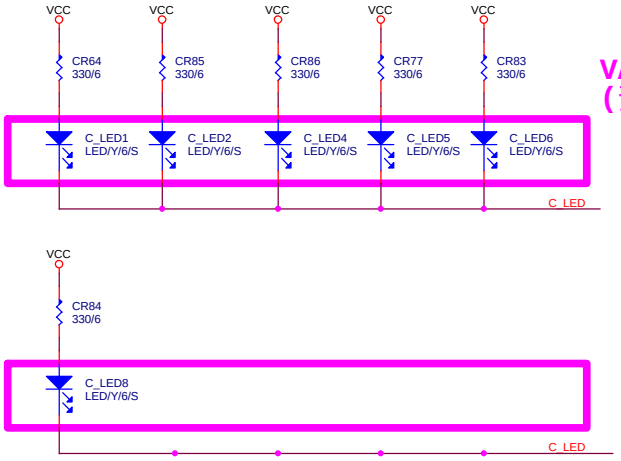

VALUE可變,LED顏色請自行修改
(預設:低亮度黃色LED:LED/Y/6/S)

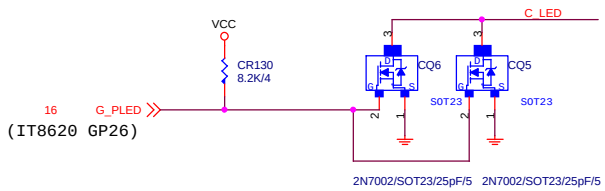

LAYOUT注意:要加
GND切割線

音效區域印刷

BOM OPTION : 1. Chemicon音效電容
2. 金屬外罩 Reserve (上件與否,依照各Model spec)
3. LED Reserve (上件與否和LED顏色,依照各Model spec)

Gigabyte Technology		
Title	HD AUDIO ALC887	
Size Custom	Document Number GA-H110M-S2H DDR3	Rev 1.0
Date: Monday, September 14, 2015	Sheet 37 of 49	

Rev 0.5

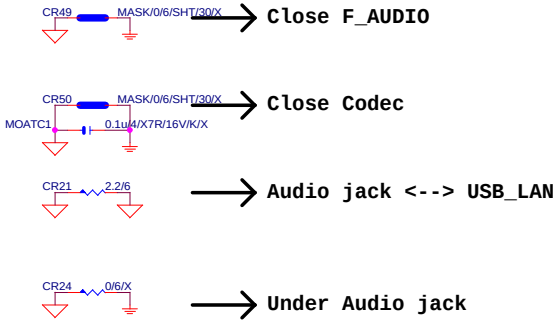

*量產前,0ohm改short pad

LINE-OUT

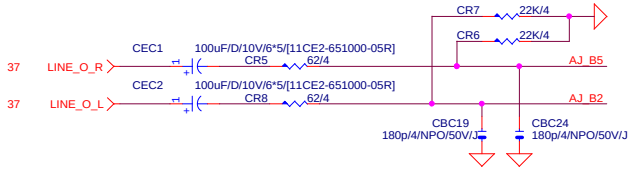

LINE-IN

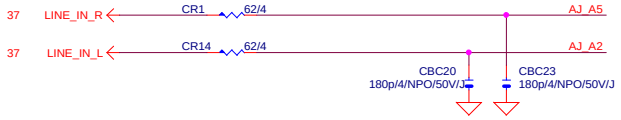

MIC-IN

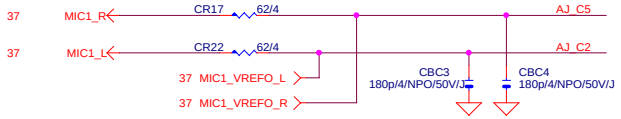

SURROUND

CEN/LFE

SPDIF_OUT

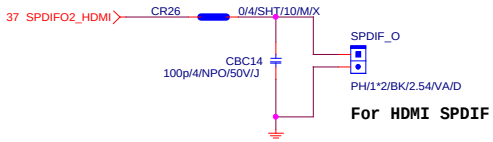

SPDIF_IN

SURR BACK

AZALIA JACK

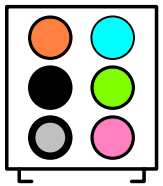

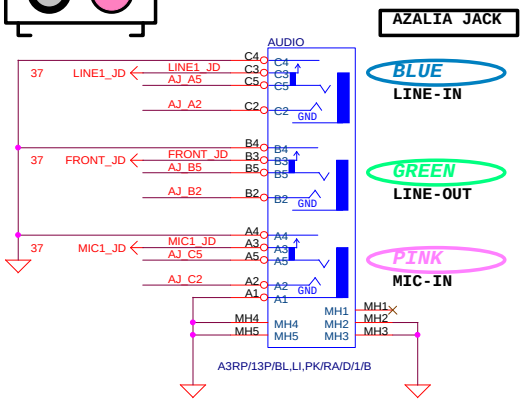

AZALIA FRONT PANEL

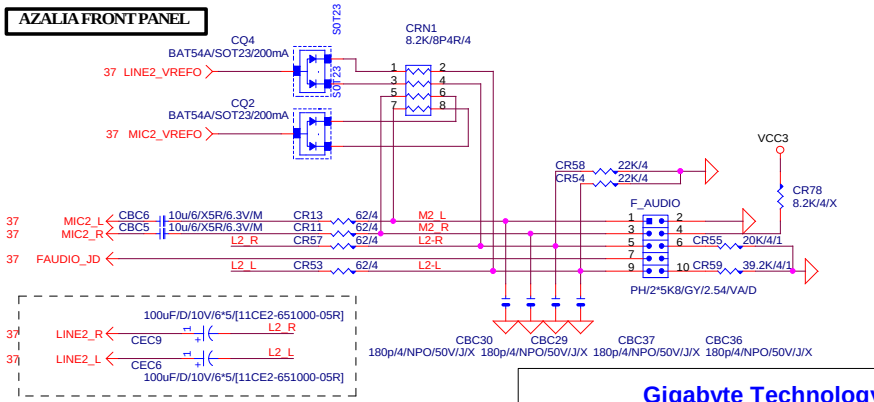

Gigabyte Technology		
Title	AUDIO JACK	
Size Custom	Document Number GA-H110M-S2H DDR3	Rev 1.0
Date: Monday, September 14, 2015	Sheet 38 of 49	

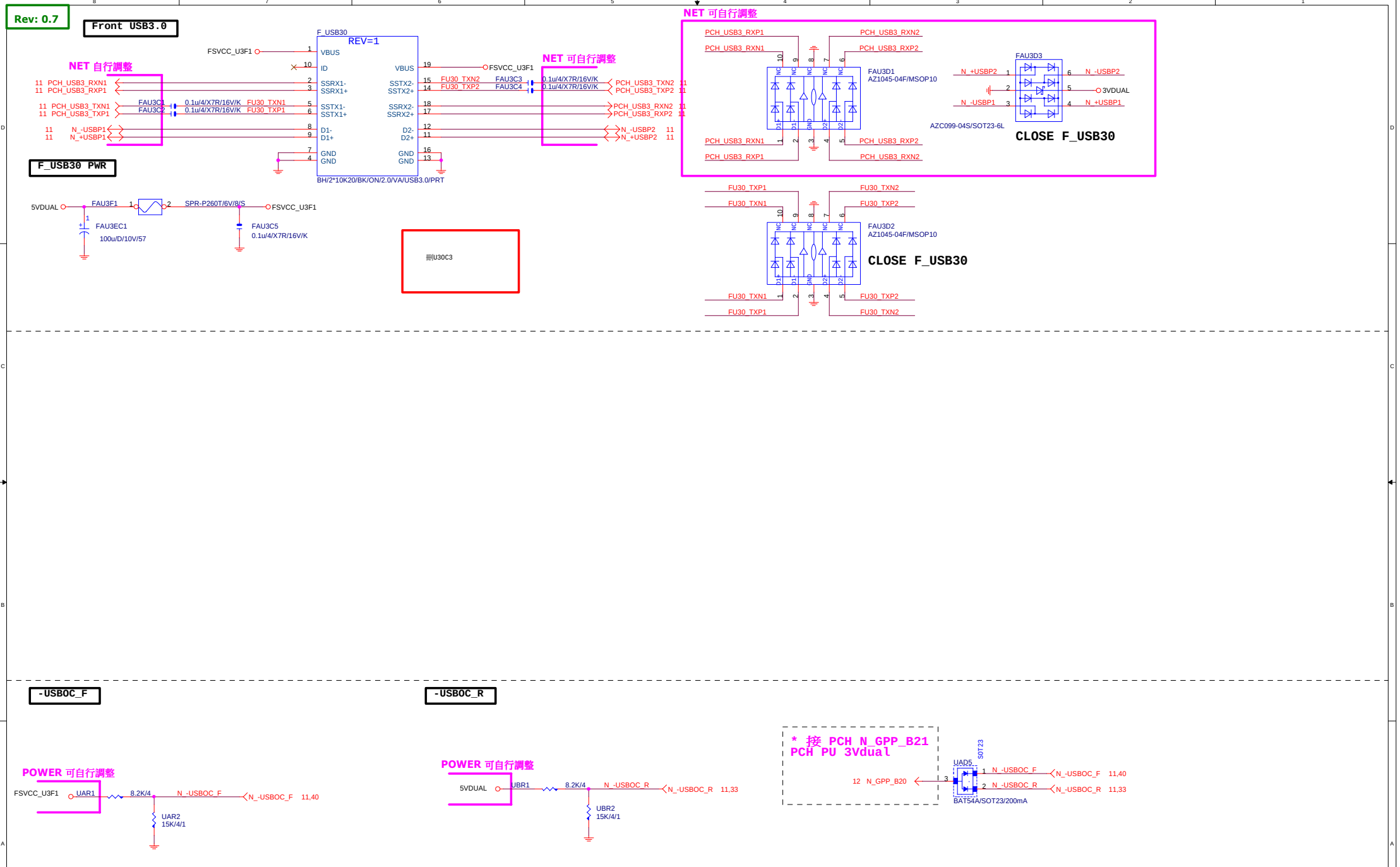

Gigabyte Technology			
Title	R_USB30,F_USB30, USB_OC		
Size Custom	Document Number	GA-H110M-S2H DDR3	Rev 1.0
Date: Monday, September 14, 2015	Sheet 39 of 49		

Rev: 0.61

FRONT USB1

NET 可變

FUSB2X5-HS

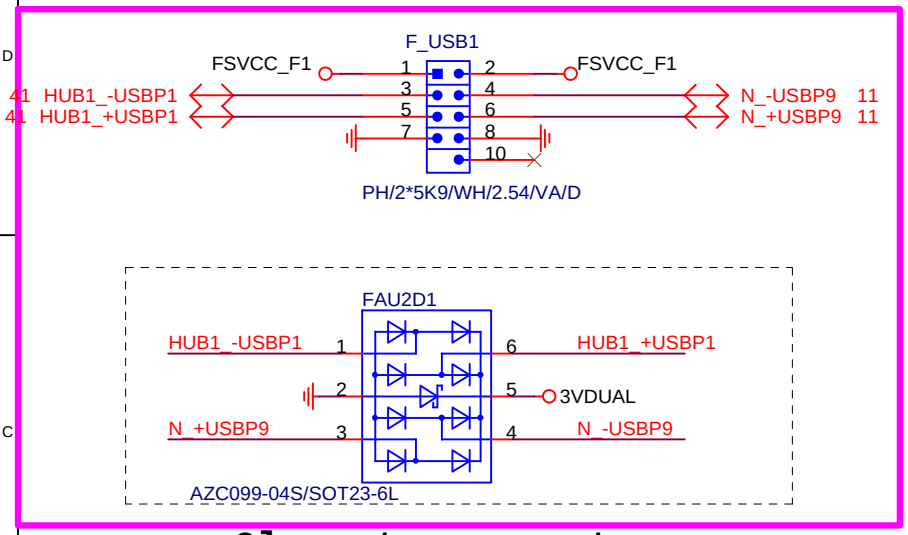

Close to connector

FUSE 2 Port 1 Fuse 2A

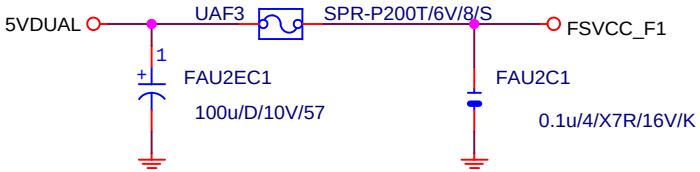

FRONT USB2

NET 可變

FUSB2X5-HS

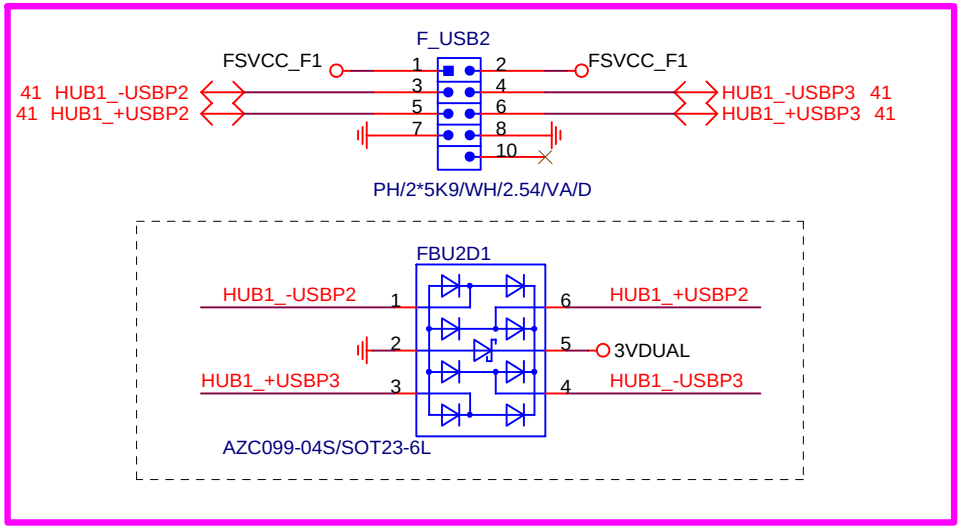

Close to connector

FUSE 2 Port 1 Fuse 2A

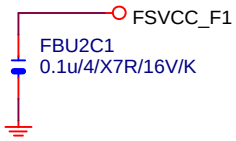

F_USB 2.0 OC SIGNAL

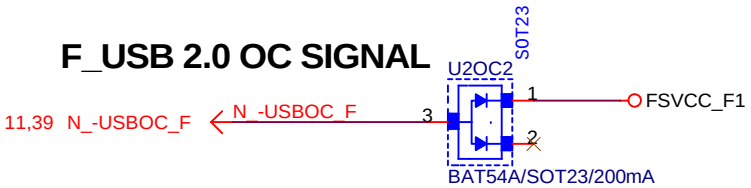

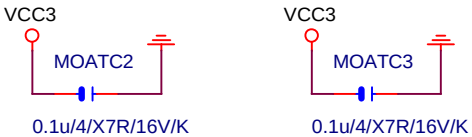

Gigabyte Technology

Title	USB2.0	
Size A	Document Number GA-H110M-S2H DDR3	Rev 1.0
Date: Monday, September 14, 2015	Sheet 40 of 49	

USB20 HUB_1

Single USB2 HUB used Rev 0.2

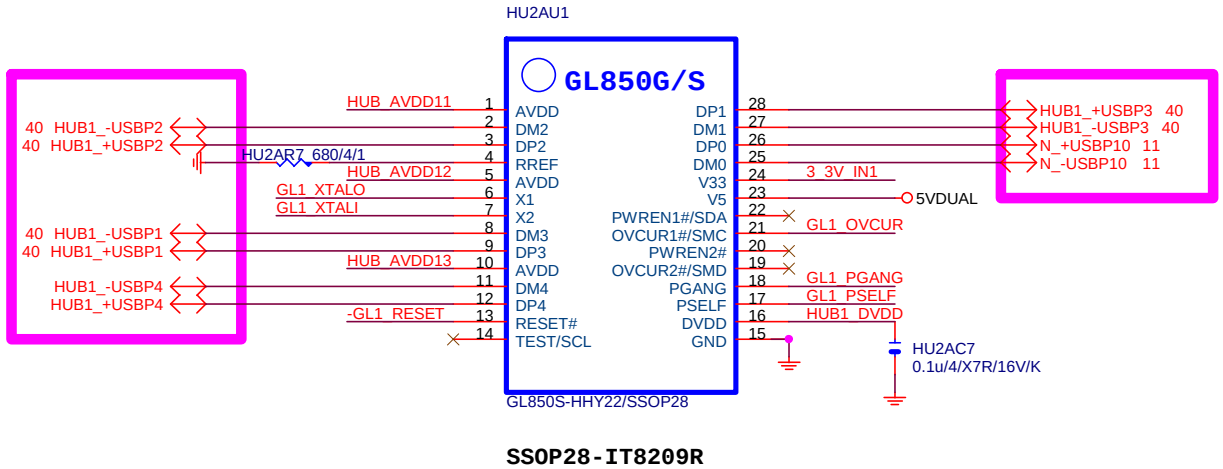

SSOP28-IT8209R

HUB PWR

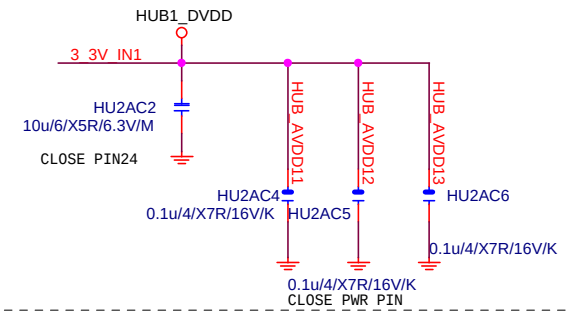

HUB OVER CURRENT SENSE

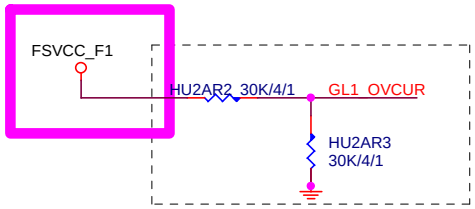

HUB MODE

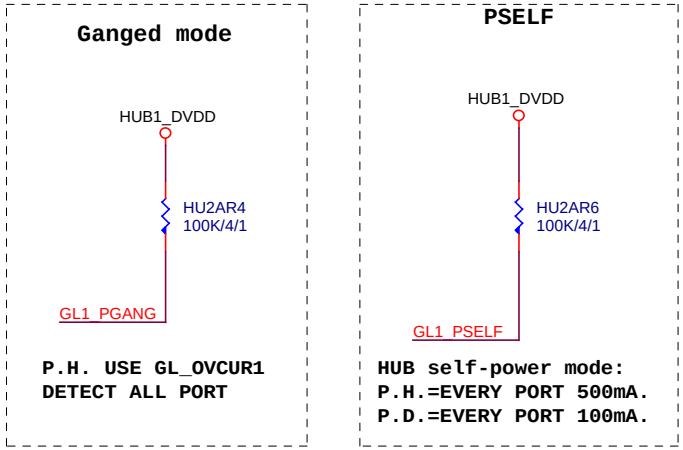

HUB RESET

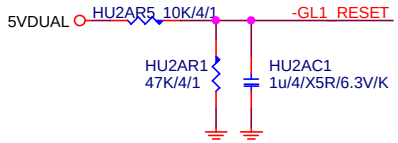

HUB CRYSTAL

ONLY SUPPORT 12MHZ

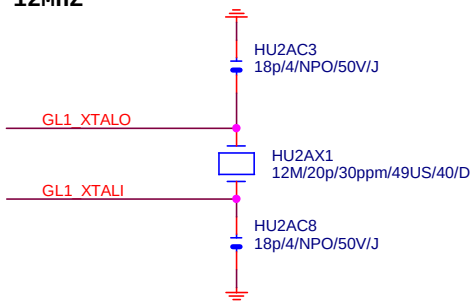

Gigabyte Technology			
Title	HUB GL850GS_1		
Size Custom	Document Number GA-H110M-S2H DDR3		Rev 1.0
Date: Monday, September 14, 2015	Sheet 41 of 49		

COM PORT

Rev: 0.7

COM PORT

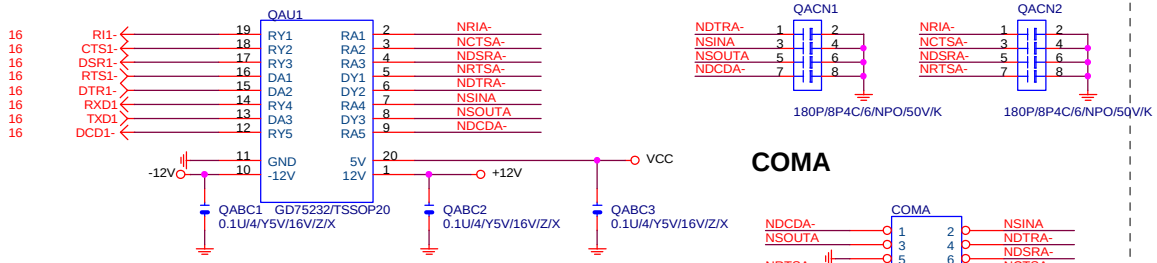

COMA

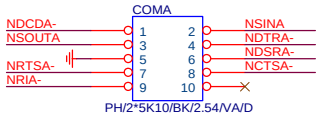

COM RI

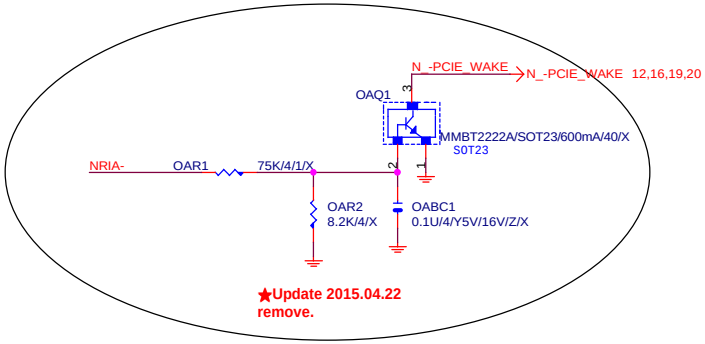

★Update 2015.04.22
remove.

LPT PORT

TPM CONNECT

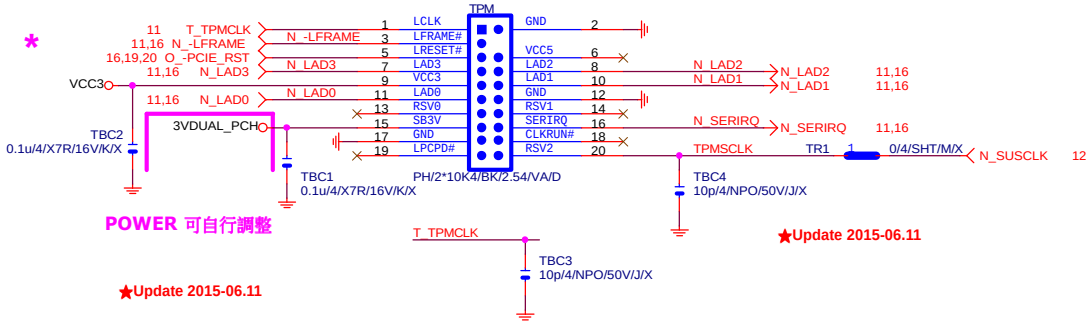

POWER 可自行調整

★Update 2015-06.11

★Update 2015-06.11

Thunderbolt (N/A)

Gigabyte Technology		
Title	FP,F_USB,USB PWR,BZ	
Size Custom	Document Number GA-H110M-S2H DDR3	Rev 1.0
Date: Monday, September 14, 2015	Sheet 42 of 49	

FRONT PANEL

Rev: 0.7

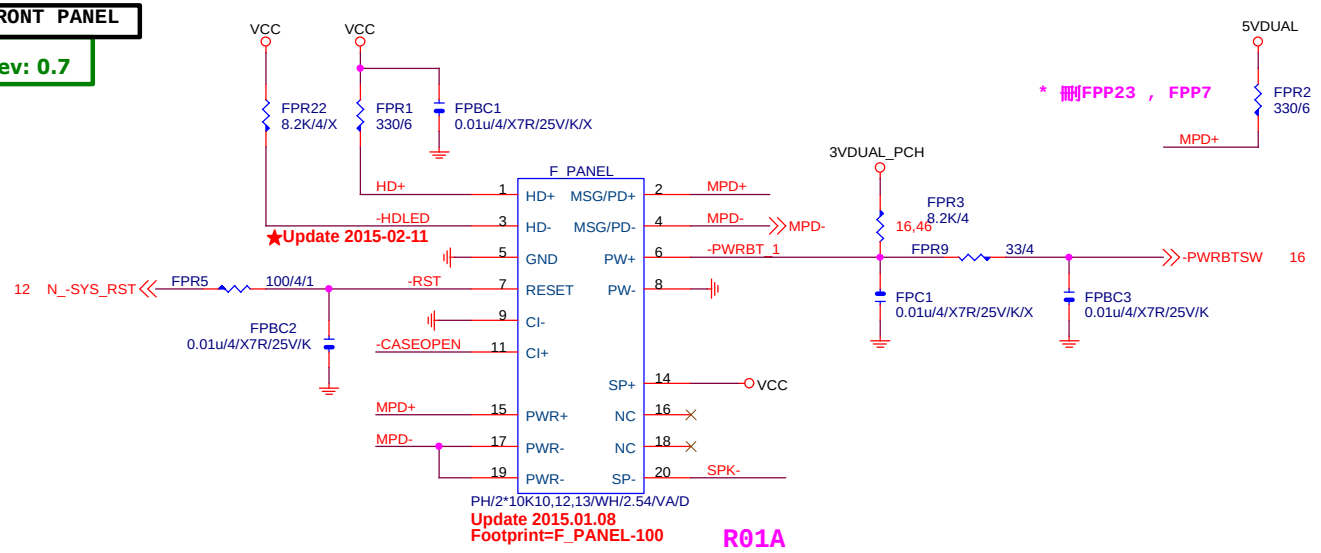

ESD

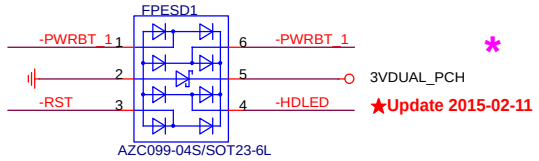

CASE OPEN

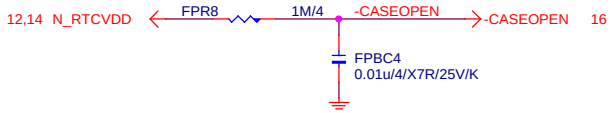

SATA LED

SATALED# signal open-collector,pull-up (8.2 kΩ to 10 kΩ) to Vcc3_3

★Update 2015-02-12

SPKR

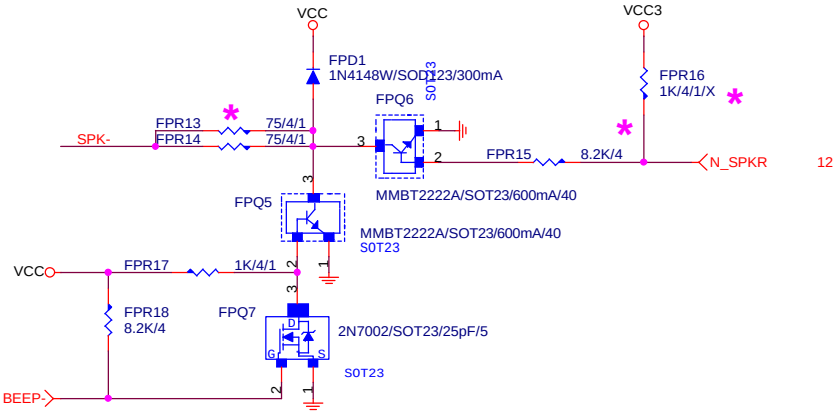

For SPKR voltage issue. FPQ6=>2222, FPQ7=>7002

Gigabyte Technology			
Title	FRONT PANEL		
Size Custom	Document Number	GA-H110M-S2H DDR3	Rev 1.0
Date: Monday, September 14, 2015	Sheet 43 of 49		

Rev: 0.7

HDMI LEVEL SHIFT

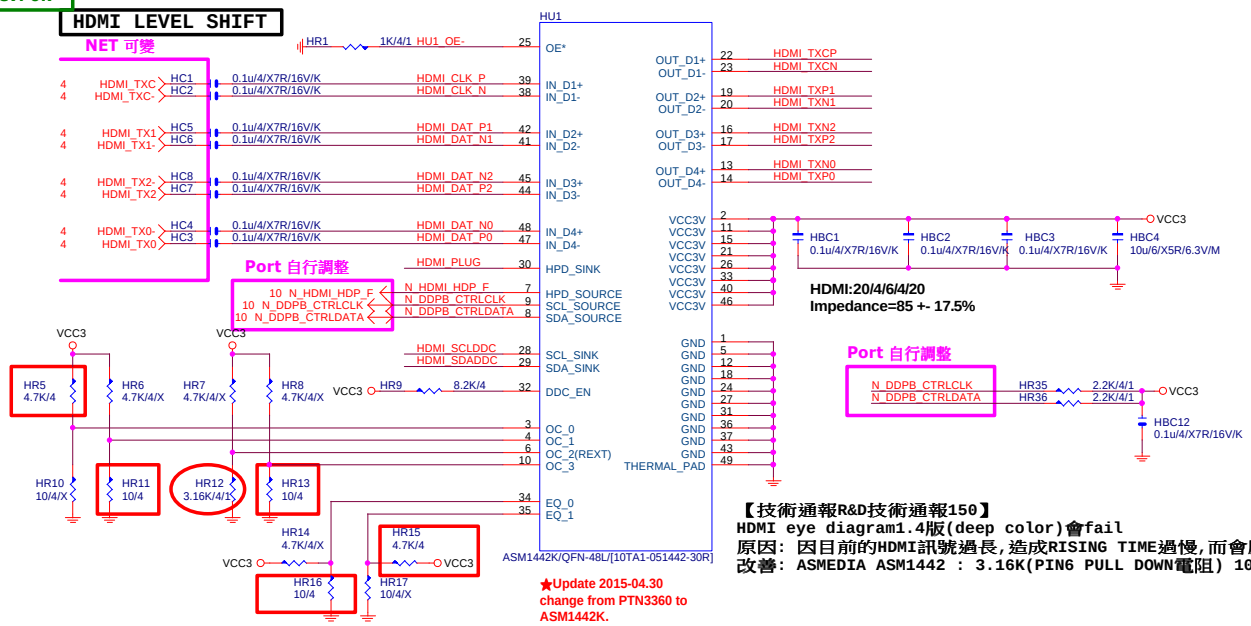

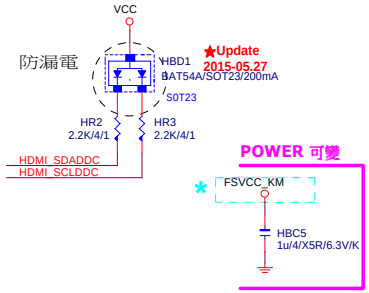

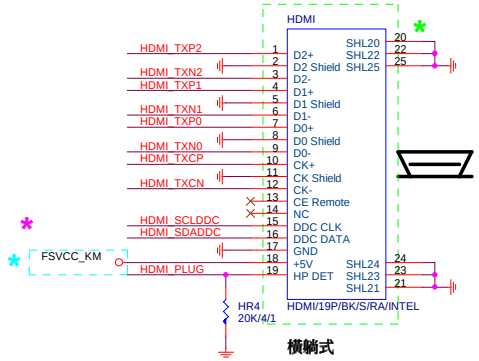

【技術通報R&D技術通報150】
HDMI eye diagram1.4版(deep color)會fail
原因: 因目前的HDMI訊號過長,造成RISING TIME過慢,而會壓到eye diagram
改善: ASMEDIA ASM1442 : 3.16K(PIN6 PULL DOWN電阻) 10ohm(PIN4 PULL DOWN電阻)

PTN3360:PIN 4/10/34/35 NC PIN,都不上值;只上HR12:10K
ASM1442:紅色框要上,HR12:3.16K

Gigabyte Technology			
Title	FP,F_USB,USB PWR,BZ		
Size Custom	Document Number	GA-H110M-S2H DDR3	Rev 1.0
Date: Monday, September 14, 2015	Sheet 44 of 49		

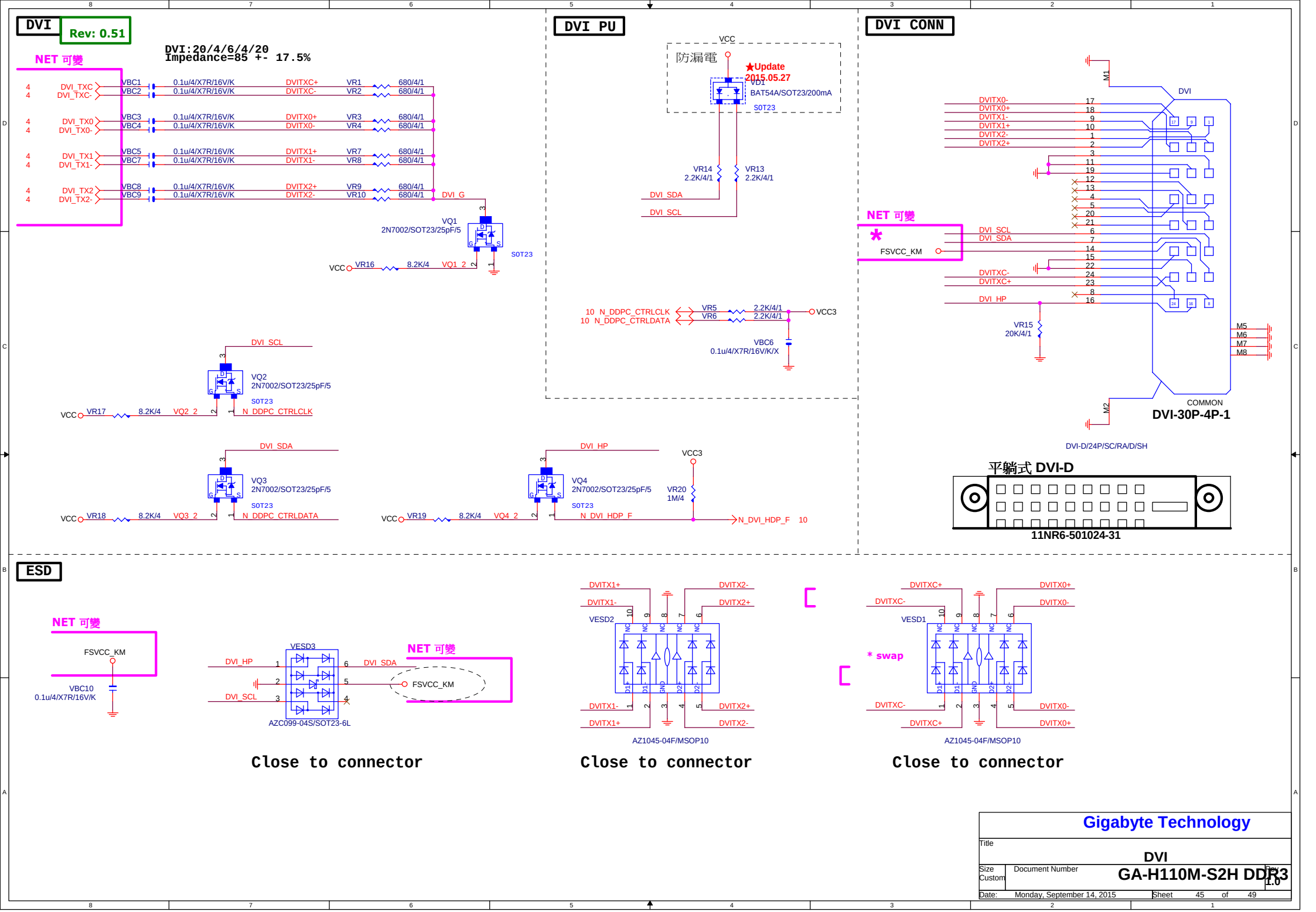
DVI
Rev: 0.51
DVI:20/4/6/4/20
Impedance=85 +- 17.5%
NET 可變
DVI_TXC
DVI_TXC-
DVI_TX0
DVI_TX0-
DVI_TX1
DVI_TX1-
DVI_TX2
DVI_TX2-
VBC1
VBC2
VBC3
VBC4
VBC5
VBC7
VBC8
VBC9
0.1u/4/X7R/16V/K
DVITXC+
DVITXC-
DVITX0+
DVITX0-
DVITX1+
DVITX1-
DVITX2+
DVITX2-
VR1
VR2
VR3
VR4
VR7
VR8
VR9
VR10
680/4/1
DVI_G
VQ1
2N7002/SOT23/25pF/5
SOT23
VCC
VR16
8.2K/4
VQ1_2
DVI_SCL
VQ2
2N7002/SOT23/25pF/5
VR17
N_DDPC_CTRLCLK
DVI_SDA
VQ3
2N7002/SOT23/25pF/5
VR18
N_DDPC_CTRLDATA
DVI_HP
VQ4
2N7002/SOT23/25pF/5
VR19
VQ4_2
N_DVI_HDP_F
VCC3
VR20
1M/4
N_DVI_HDP_F 10
DVI PU
防漏電
VCC
★Update
2015.05.27
VD1
BAT54A/SOT23/200mA
SOT23
VR14
2.2K/4/1
VR13
2.2K/4/1
DVI_SDA
DVI_SCL
10 N_DDPC_CTRLCLK
10 N_DDPC_CTRLDATA
VR5
VR6
2.2K/4/1
VCC3
VBC6
0.1u/4/X7R/16V/K/X
DVI CONN
M1
DVI
DVITX0-
DVITX0+
DVITX1-
DVITX1+
DVITX2-
DVITX2+
NET 可變
*
FSVCC_KM
DVI_SCL
DVI_SDA
DVITXC-
DVITXC+
DVI_HP
VR15
20K/4/1
M5
M6
M7
M8
M2
COMMON
DVI-30P-4P-1
DVI-D/24P/SC/RA/D/SH
平躺式 DVI-D
11NR6-501024-31
ESD
NET 可變
FSVCC_KM
VBC10
0.1u/4/X7R/16V/K
VESD3
DVI_HP
DVI_SCL
DVI_SDA
NET 可變
FSVCC_KM
AZC099-04S/SOT23-6L
Close to connector
VESD2
DVITX1+
DVITX1-
DVITX2-
DVITX2+
AZ1045-04F/MSOP10
Close to connector
VESD1
DVITXC+
DVITXC-
DVITX0+
DVITX0-
* swap
AZ1045-04F/MSOP10
Close to connector
Gigabyte Technology
Title
DVI
Size
Custom
Document Number
GA-H110M-S2H DDR3
Rev
1.0
Date: Monday, September 14, 2015
Sheet 45 of 49

EMI/ESD R0.1

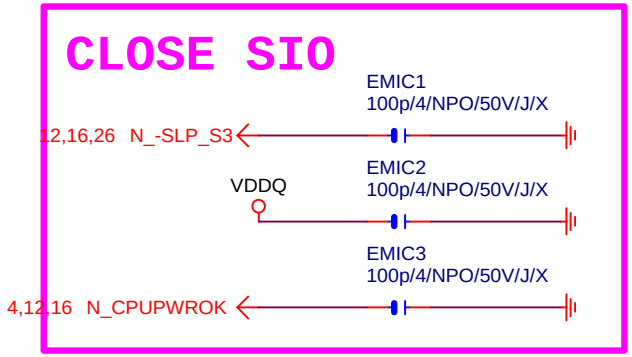

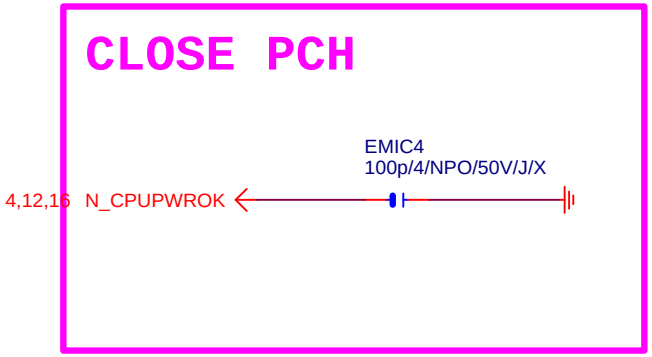

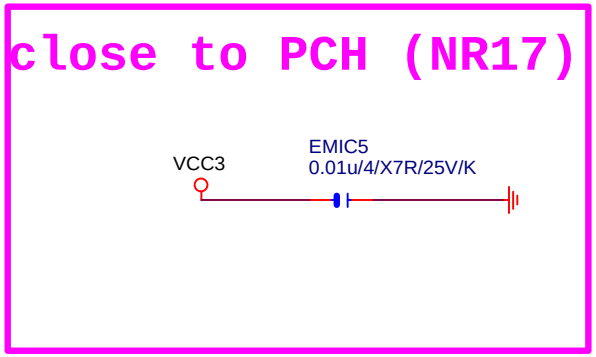

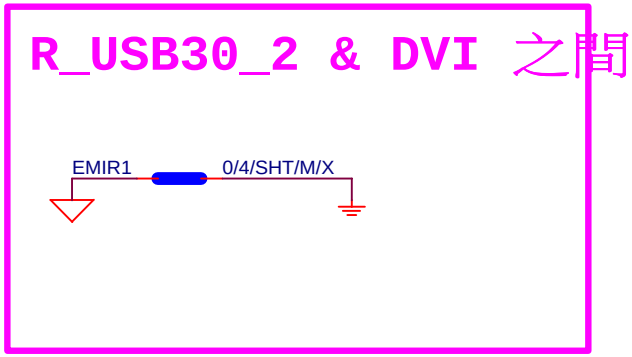

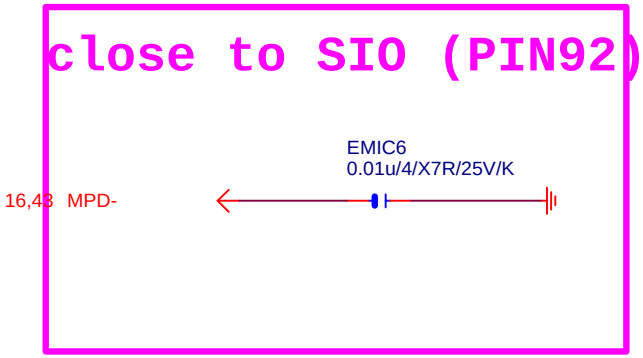

GIGABYTE™

Title	EMI/ESD	
Size A	Document Number GA-H110M-S2H DDR3	Rev 1.0
Date: Monday, September 14, 2015	Sheet 46 of 49	

POWER BLOCK MAP

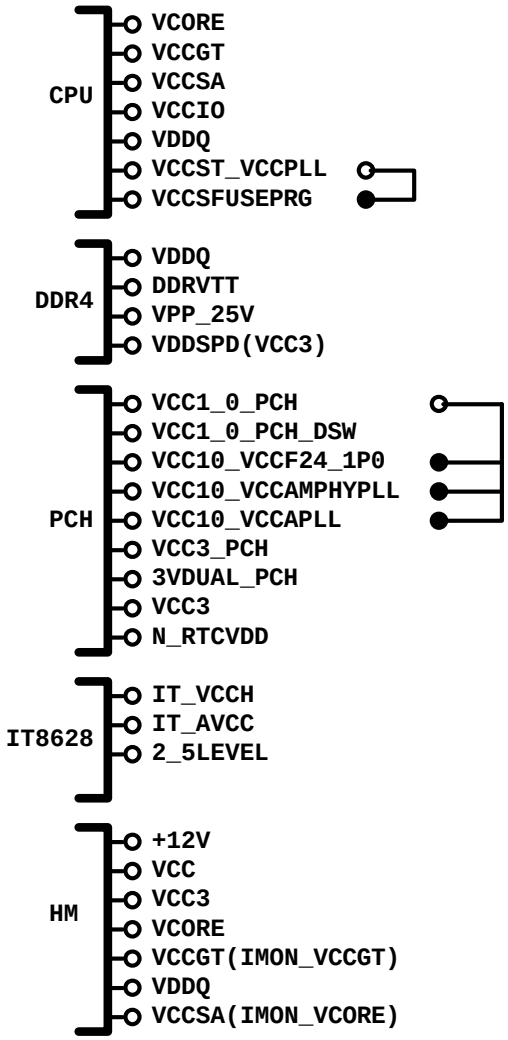

VCORE/VCCGT

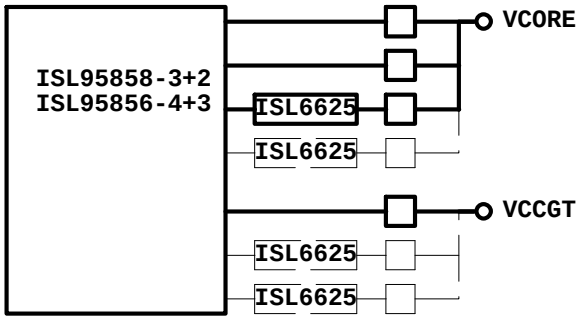

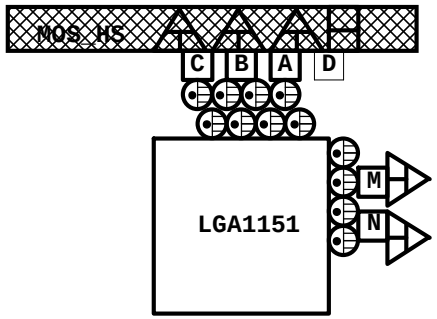

POWER

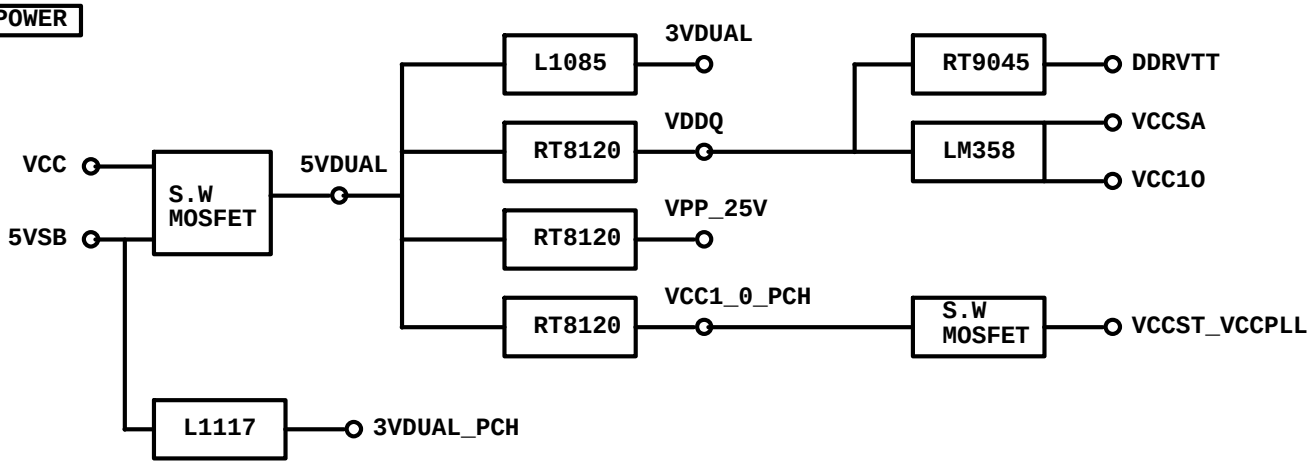

FUSE POWER F/R

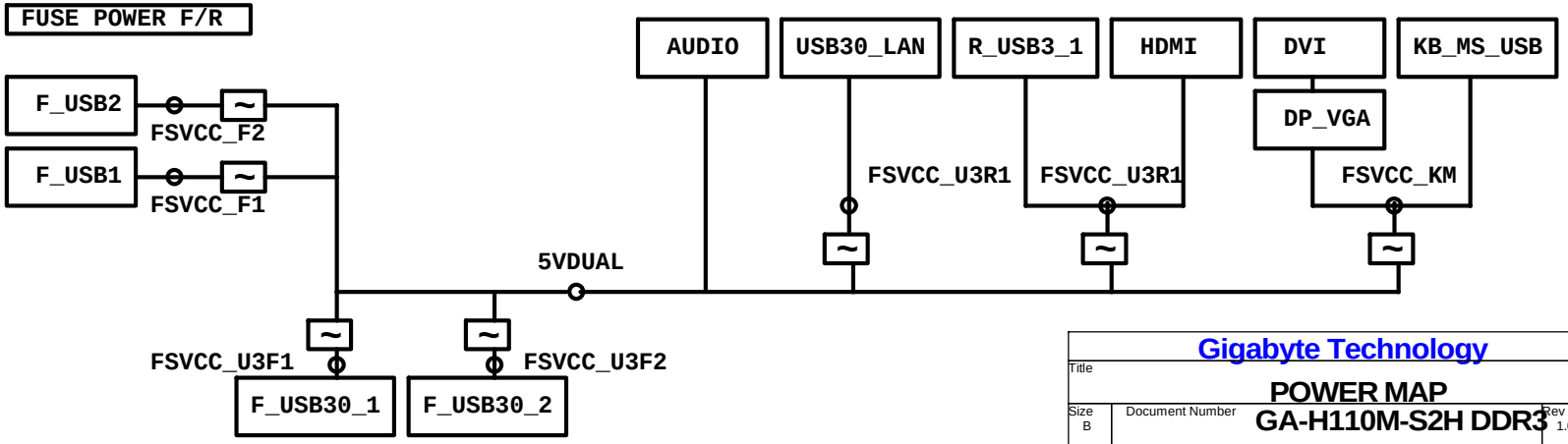

Gigabyte Technology			
Title	POWER MAP		
Size B	Document Number GA-H110M-S2H DDR3		Rev 1.0
Date: Monday, September 14, 2015	Sheet 47 of 49		

固態電容料號.請自行修改

日系黑色固態	Capture Value
11C02-C85600-01R	560u/FP/D/6.3V/68/C/8m
11CO5-C82700-01R	270u/FP/D/16V/88/C/12m
11CO5-C61000-01R	100u/OS/D/16V/66/C/30m
11CO2-C51000-01R	100u/FP/D/6.3V/65/C/13m

日系一般固態	Capture Value
11CO2-685600-01R	560u/FP/D/6.3V/68/8m
11CO5-882700-01R	270u/FP/D/16V/88/12m
11CO5-661000-03R	100u/OS/D/16V/66/30m
11CO2-651000-02R	100u/OS/D/6.3V/66/30m

台系固態	Capture Value
11CO2-661000-09R	100u/OS/D/6.3V/66/A/35m
11CO5-691000-09R	100u/OS/D/16V/69/A/35m
11CO5-8C2700-09R	270u/FP/D/16V/8C/A/10m
11CO2-695600-09R	560u/FP/D/6.3V/69/A/11m

IRON CHOKE

	料號	Capture Value	SIZE	Footprint
DIP	11LC5-M4500C-01R	0.5uH/40A/IMD109/M/D	10*10	CHOKE05U-40A-1PQ-3
DIP	11LC5-M2500C-01R	0.5uH/20A/IMD0809/M/D	8*8	CHOKE1U-R50M-IF

Ferrite

	料號	Capture Value	SIZE	Footprint
DIP	11LC5-F3500C-11R	0.5uH/32A/INCG109/FSI/D	10*10	CHOKE05U-40A-1PQ-3
DIP	11LC5-F2500C-11R	0.5uH/25A/INC0809/F/D	8*8	CHOKE1U-R50M-IF
SMD	未建(SIUC1007-R30M-JJ1W)		10*7	CHOKE11X8MM-SMD

BEAD

	料號	Capture Value	SIZE	Footprint
DIP	10LFB-15470A-01R	47/4030/15A/S	4*3	BEADC8B-BPH_SMD

PWM料號

		料號	Capture Value	Footprint
PWM	ISL95856	10TA1-695856-01R		IC52QFN-6x6-G
PWM	ISL95858	10TA1-695858-01R		IC52QFN-6x6-G
PWM	IR35201	10TA1-635201-00R		IC56QFN-9VRS4339
PWM	IR3570	10TA1-603570-00R		IC40MLFP-ISL95835

GIGABYTE™

Title: RT8120_DDR4 POWER

Size: Custom | Document Number: GA-H110M-S2H DDR3 | Rev: 1.0

Date: Monday, September 14, 2015 | Sheet 48 of 49

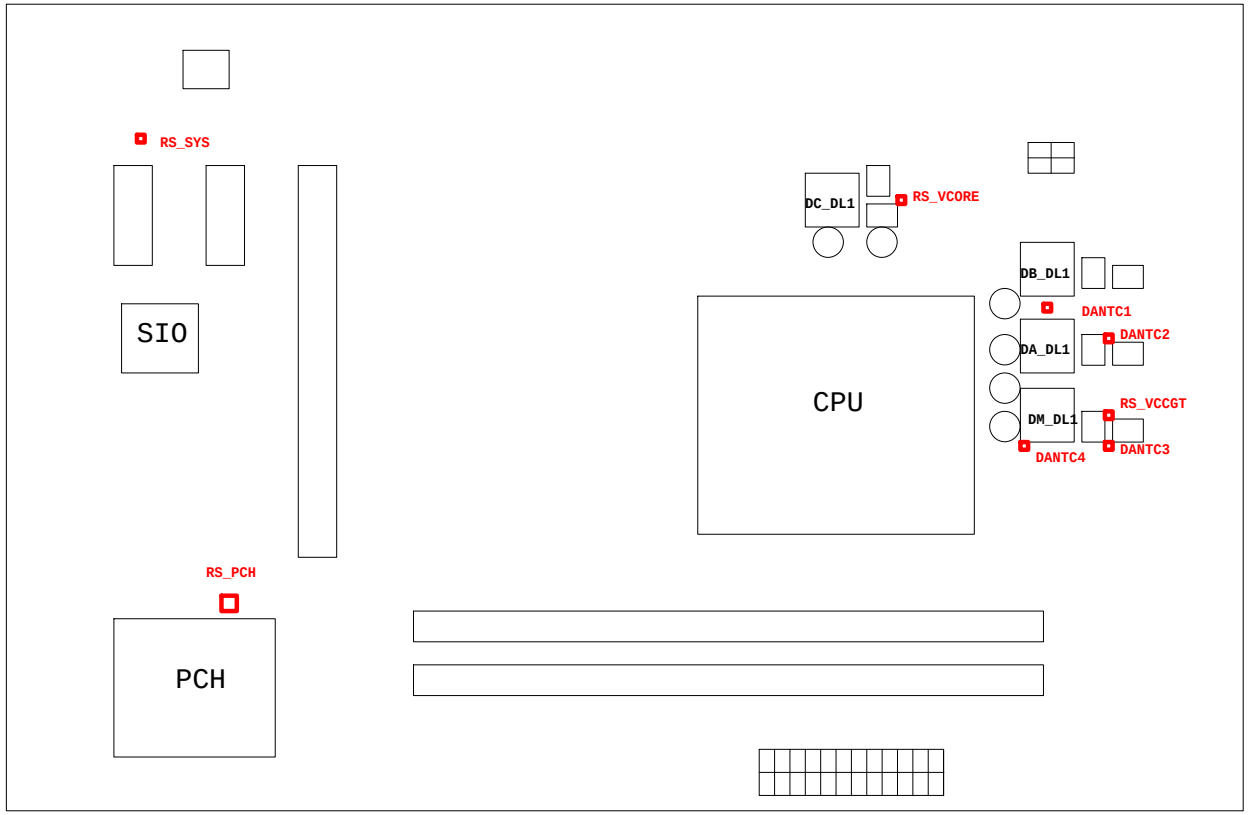

熱敏電阻	擺放靠近位置	走線方式
DANTC4	DM_DL1	Differential
DANTC1	DA_DL1	Differential
DANTC3	DM_DQ1	Differential
DANTC2	DA_DQ1	Differential
RS_VCORE	DA_DQ1	N/A
RS_VCCGT	DM_DQ1	N/A
RS_PCH	PCH	N/A
RS_SYS	CU1	N/A

Gigabyte Technology

Title: NTC MAP

Size: Custom | Document Number: GA-H110M-S2H DDR3 | Rev: 1.0

Date: Monday, September 14, 2015 | Sheet 49 of 49